ISO 9001 ISOQAR

UKAS MANAGEMENT SYSTEMS 0026

Certificate Number 17923-Q15-001

CE





S&L®

SLEx SERIES

Explosion-Proof Three Phase Asynchronous Motors



ATT ELECTRIC & MACHINERY PTE LTD

ENQUIRY FORM

Company name: _____ Contact number: _____

Customer name: _____ Email address: _____

Required motor specification:

Application: _____ Location: ☐ Indoors ☐ Outdoors

Explosion Proof: ☐ Yes ☐ No If Yes, Ex-Classification: _____

Efficiency Class: ☐ IE1 ☐ IE2 ☐ IE3 ☐ IE4 ☐ Others: _____

Poles: ☐ 2 ☐ 4 ☐ 6 ☐ 8 ☐ Others: _____

Rated Output: _____ kW/HP

Voltage/Phase/Frequency: _____ V/Ph/Hz

Connection Method: ☐ Delta(Δ) ☐ Star(Y) ☐ Others: _____

Service Factor: _____ Duty (S1 to S9): _____

Frame Size (IEC): _____ Rated Current: _____

Cooling Method: ☐ TEFC (IC411) ☐ TENV (IC410) ☐ TEAO (IC418) ☐ TEFV (IC416)

Mounting: ☐ B3 ☐ B5 ☐ B35 ☐ V1 ☐ Others: _____

Mounting Method: ☐ Horizontal ☐ Vertical (Shaft Up) ☐ Vertical (Shaft down)

Ingress Protection (IP): ☐ IP55 ☐ IP56 ☐ IP65 ☐ IP66 ☐ Others: _____

Insulation Class: ☐ Class F (155°C) ☐ Class H (180°C)

Temperature Rise: ☐ Class B (80K) ☐ Class F (105K) ☐ Others: _____

Fire Rating: ☐ N/A ☐ 250°C/2H ☐ 300°C/2H ☐ 400°C/2H ☐ Ext Wire: _____ mm

Ambient Temperature: _____

Starting Method: ☐ DOL ☐ Star-Delta ☐ Inverter ☐ Others: _____

Starting Time: _____ seconds

Inverter Frequency Range: _____ Hz to _____ Hz

Forced Cooling Fan: ☐ Yes ☐ No Forced Cooling Fan Specifications: _____ V/Ph/Hz

Brake: ☐ Yes ☐ No Brake Voltage: _____ V_{DC} Rectifier: _____ V_{AC} Half or Full Wave

Drive Method: ☐ Direct Coupling ☐ Belt Drive ☐ Others: _____

INTRODUCTION

Founded in 1981, Act Electric & Machinery Pte Ltd is a premier electric motor manufacturer started by a group of veterans determined to provide solutions for every customer's electric motor needs. Our expertise in manufacturing tailor-made motors for usage under special conditions is an assurance of customizability coupled with high performance. Under the ever-changing market environment, we are committed to constant innovation, offering you top quality products and first-class customer service.

Act is a worldwide supplier of electric motors, parts, and services in the industrial equipment sector. Our clientele includes distributors, original equipment manufacturers and end users in more than 70 countries. Driven by your specific requirements, we guarantee original electrical and mechanical solutions at competitive prices, for numerous applications in various markets, such as industrial automation, construction, agricultural, electrical, engineering and consumer applications.

Act is proud to be an authorised distributor of the SLEx series Explosion-Proof motors produced by Shanghai Shuanglong.

ABOUT SHANGHAI SHUANGLONG

Shanghai Explosion Proof Motor Yancheng Corp., Ltd Shuanglong Group (hereafter referred to as S&L) is headquartered in Nanxiang Industry Zone Shanghai, covering 29,600m^2, with a total of 1,273 employees. Presently, S&L has three factories located in Shanghai, Yancheng etc, and with the implementation of modern management systems and production systems, S&L has become one of the largest exporters of electric motors in China.

Shanghai Explosion-Proof Motor Co., Ltd (hereafter referred to as Shanghai), is a subsidiary of S&L, and has a manufacturing facility located in Yancheng, covering 78,000m^2. Shanghai specialises in manufacturing explosion-proof motors with IEC Ex certification, IEC and NEMA standard low, medium and high voltage motors, and permanent magnet synchronous motors. These motors are available from a rated output of 0.55kW to 20,000kW, with an IEC frame size of 80 to 1000, suitable for use in many applications such as pumps, ventilation fans, compressors; and for industries such as petroleum, coal mine, chemical, metallurgical, electric power, military, nuclear power, etc.

Shanghai currently sits on board of the following committees: (1) Explosion-Proof Electrical Branch of the Electromechanical Safety Committee of China Coal Industry Safety Science and Technology Society; (2) China Explosion-Proof Electrical Equipment Standardization Technical Committee; (3) Ventilation Technology and Equipment of China Coal Industry Coal Mine Safety Standardization Technical Committee.

S&L prides itself on having a strong research and development team, advanced production equipment, comprehensive motor testing facility and a modern management system. Presently, S&L has more than 100 experienced senior engineers and senior management staff and has implemented a comprehensive ERP management system. S&L considers product quality as its foremost priority, and the company has obtained the ISO9001 Quality Management System Certificate, ISO14001 Environmental Management System Certificate, GB/T28001-2001 Occupational Health and Safety Management System Certificate, CE Certificate, ATEX Certificate, IECEx Certificate, etc.

EXPLOSION PROOF KNOWLEDGE

Zone Classification for Explosion Proof Motors: Hazardous areas are classified into Zone 0, 1 or 2 and Zone 20, 21 or 22 for gas and dust atmospheres respectively as listed in Table 1.

Table 1: Zones Classification

Zone		Zone Definitions IEC 60079-10-1 & IEC 60079-10-2	Motor Used
Gas	Dust		
Zone 0	-	*Explosive Area* - an explosive gas atmosphere is continuously present, or present for long periods of time. (> 1000 hours/year)	None
Zone 1	-	*Frequent Explosive Area* – an explosive gas atmosphere is likely to occur in normal operation. (Between 10-1000 hours/year)	Ex d motors
Zone 2	-	*Occasional Explosive Area* – an explosive gas atmosphere is not likely to occur in normal operation or infrequently and for short periods of time. (< 10 hours/year)	Ex d, Ex e or Ex nA motors
-	Zone 20	*Explosive Area* – a combustible dust atmosphere is continuously present, or present for long periods of time. (> 1000 hours/year)	None
-	Zone 21	*Frequent Explosive Area* – a combustible dust atmosphere is likely to occur in normal operation. (Between 10-1000 hours/year)	Ex tb
-	Zone 22	*Occasional Explosive Area* – a combustible dust atmosphere is not likely to occur in normal operation or infrequently and for short periods of time. (< 10 hours/year)	Ex tc

Electrical Apparatus Grouping: Group I refer to electrical apparatus for mines susceptible to firedamp. Group II refer to electrical apparatus for places with an explosive gas atmosphere other than mines susceptible to firedamp. Electrical apparatus of Group II is subdivided into IIA, IIB and IIC according to the nature of the explosive gas atmosphere. Examples of the explosive gas vapour and temperature class of Group II are given in Table 2.

Table 2: Group II Explosive Gas Vapours and Temperature Class

Class	Temperature Class				
	T1	T2	T3	T4	T5
IIA	Methane, Ammonia, Ethane, Propane, Styrene, Benzene, Xylene, Toluene, Carbon Monoxide	Butanol, Butane, Ethanol, Propylene, Ethylbenzene, Methanol, Propanol	Cyclohexane, Pentane, Hexane, Heptane, Octane, Kerosene, Diesel, Gasoline, Decane	Acetal-de-hyde	
IIB	Propargyl, Cyclopropane, Coke Oven and Coal Gas	Ethylene Oxide, Ethylene, 1,2-Epoxypropane	Ethylene Glycol Tetrahydrofurfuryl Ether, Butenal, Acrolein, Hydrogen Sulphide	Ethyl Methyl Ether, Diethyl Ether, Tetrafluoroethylene	
IIC	Hydrogen	Acetylene			Carbon Disulphide

Temperature Class: The temperature class in Table 3 indicates the maximum temperature of the exposed surface of Group II electrical apparatus can reach in order to avoid ignition. (Note: the following temperature class is based on use with ambient temperature of -20°C to 40°C.)

Table 3: Group II Temperature Classes and Maximum Surface Temperature

Temperature Class	Maximum Surface Temperature (°C)
T1	450
T2	300
T3	200
T4	135
T5	100
T6	85

GENERAL DESCRIPTION

SLEx Explosion Proof Series Flameproof Three Phase Induction motors are uniquely designed to contain sparks within the motor without igniting external vapours. This makes them safe for use in hazardous locations. They are manufactured in China and come with IECEx and ATEX certifications.

STANDARD SPECIFICATIONS AND FEATURES OF EXPLOSION PROOF SERIES MOTORS	
Item	**Standard Specifications**
Type of electric motor	Totally Enclosed Fan Cooled squirrel cage induction motor
Design standards	IEC60079-1, DIN42673
Voltage and frequency	Standard motors available: 220-240V/380-415V/50Hz for 2.2kW & below 380-415V/660-720V/50Hz for 3kW & above Other voltages such as 200V, 346V, 440V, 460V & 60Hz, etc can be supplied on request
Power conditions	±5% of rated voltage; ±2% of rated frequency
Time duty	Continuous S1 duty
Cooling method	Self-external fan, surface cooling (IC411)
Method of starting	Full voltage direct on line, star-delta, or VFD starting
Mounting	Horizontal foot and/or flange mounting: B3; B5; B14; B34; B35; V1
Stator insulation	Class F insulation; Class B temperature rise
Rotor design	Squirrel cage, aluminium conductor with end-ring and wafer blades integrally cast
Protection	IP66
Environmental conditions	Ambient temperature: -20°C to 40°C Relative humidity: Less than 90% RH (non-condensation) Altitude: Less than 1,000m above sea level
Direction of rotation	Standard motors are suitable for operation in either direction of rotation Direction of rotation of motor can be reversed by interchanging any two phases
Test procedure	IEC and full voltage measuring starting operation
Shaft	Carbon steel, round shaft with key
Bearing	Motors of frame sizes 160 and below are fitted with life-lubricated bearings Motors of frame sizes 180 and above are fitted with open bearings and grease nipple
Painting	Phenolic rust-proof base plus lacquer surface finish
Nameplate	Stainless steel
Grounding terminal	Set inside the terminal box
Fan cover	Pressed Steel
Lubrication	2P: ALTIS EM 2 or equivalent 4P and above: Unirex N2 or equivalent
PTC thermistor	Sensing Temperature: 150°C Available for motors of frame sizes 160 and above as standard accessory
Anti-condensation heater	220V 50/60Hz (Optional)

MOUNTING ARRANGEMENTS (IEC 60034-7)

Foot					
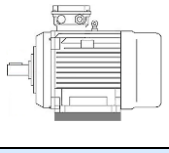	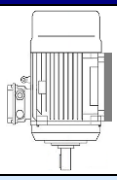	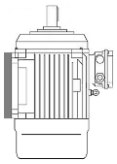	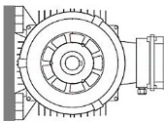	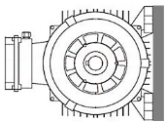	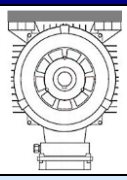
B3 (IM1001)	V5 (IM1011)	V6 (IM1031)	B6 (IM1051)	B7 (IM1061)	B8 (IM1071)
Flange			**Flange and Feet**		
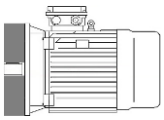	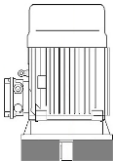	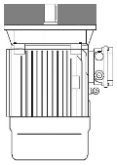	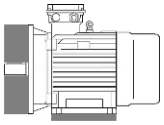	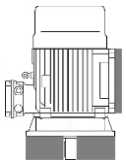	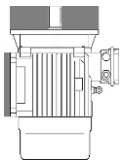
B5 (IM3001)	V1 (IM3011)	V3 (IM3031)	B35 (IM2001)	V15 (IM2011)	V36 (IM2031)
Small Flange			**Small Flange and Feet**		
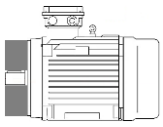	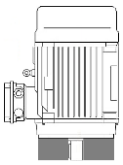	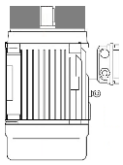	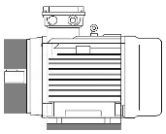	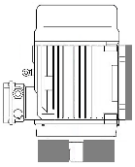	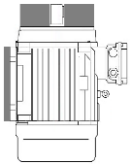
B14 (IM3601)	V18 (IM3611)	V19 (IM3631)	B34 (IM2101)	V17 (IM2111)	V37 (IM2131)

CONNECTION DIAGRAMS

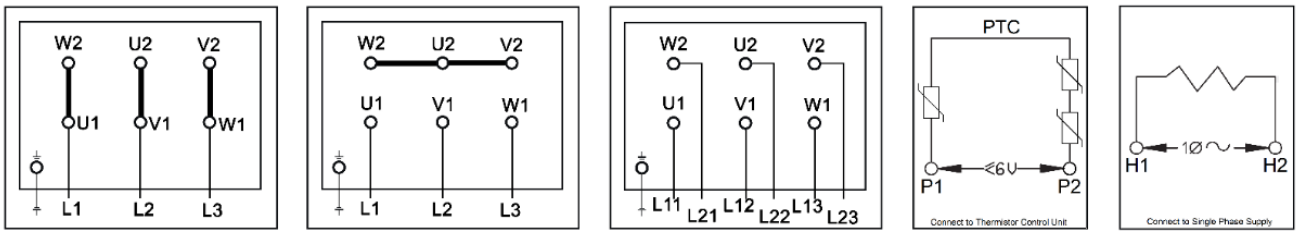

Delta Connection | Star Connection | Star-Delta Connection | PTC Thermistor | Space Heater

Note: 150°C PTC Thermistor is provided as a standard for all Class F motors F#160 and above. Space Heater is provided on request.

BEARING SIZES

Frame	DE	NDE
80	6204-2Z/C3	6204-2Z/C3
90	6205-2Z/C3	6205-2Z/C3
100	6206-2Z/C3	6206-2Z/C3
112	6206-2Z/C3	6206-2Z/C3
132	6208-2Z/C3	6208-2Z/C3
160	6309-2Z/C3	6209-2Z/C3
180	6311/C3	6211/C3
200	6312/C3	6212/C3
225 2P	6312/C3	6312/C3
225 4P-8P	6313/C3	6312/C3
250 2P	6313/C3	6313/C3
250 4P-8P	6314/C3	6313/C3
280 2P	6314/C3	6314/C3
280 4P-8P	6317/C3	6314/C3
315 2P (Horizontal)	6316/C3	6316/C3
315 2P (Vertical)	6317/C3	7317/C3
315 4P-8P (Horizontal)	NU319	6319/C3
315 4P-8P (Vertical)	6319/C3	7319/C3
355 2P (Horizontal)	6319/C3	6319/C3
355 2P (Vertical)	6319/C3	7319/C3
355 4P-8P (Horizontal)	NU322	6322/C3
355 4P-8P (Vertical)	6322/C3	7322/C3

Note: 1. For differing bearing sizes, please refer to ATT.
2. For frame size 160 and below, all motors come with life-lubricated bearings.
3. All technical details are subject to change without prior notice.

JEP(IIB)/JEC(IIC) (SLEx IE1) PERFORMANCE DATA AT 50HZ

Synchronous speed (2Pole/3000RPM, 4Pole/1500RPM, 6Pole/1000RPM, 8Pole/750RPM)

Rated Output		Pole	Model	Rated Speed (RPM)	Rated Current (I_{FL})			Power Factor (cosØ)	Eff (%)	I_{LR}/I_{FL}	T_{FL} (Nm)	T_{LR}/T_{FL}	T_M/T_{FL}	Moment of Inertia ($kg.m^2$)	Weight (kg)
kW	HP				380V (A)	400V (A)	415V (A)								
0.18	0.25	8	SLEx-80M1-8	630	1.18	1.12	1.08	0.61	38.0	3.3	2.70	1.8	1.9	0.0027	16
0.25	0.34	8	SLEx-80M2-8	640	1.43	1.36	1.31	0.61	43.4	3.3	3.70	1.8	1.9	0.0032	17
0.37	0.5	6	SLEx-80M1-6	890	1.35	1.28	1.23	0.70	59.7	4.7	3.90	1.9	2.1	0.0021	15
		8	SLEx-90S-8	660	1.85	1.76	1.70	0.61	49.7	4.0	5.30	1.8	1.9	0.0043	23
0.55	0.75	4	SLEx-80M1-4	1390	1.59	1.51	1.46	0.75	70.0	5.2	3.70	2.3	2.3	0.0019	15
		6	SLEx-80M2-6	890	1.76	1.68	1.62	0.72	65.8	4.7	5.90	1.9	2.1	0.0031	16
		8	SLEx-90L-8	660	2.44	2.32	2.24	0.61	56.1	4.0	7.90	1.8	2.0	0.0055	25
0.75	1	2	SLEx-80M1-2	2830	1.90	1.81	1.74	0.83	72.1	6.1	6.40	2.2	2.3	0.0010	15
		4	SLEx-80M2-4	1390	2.11	2.00	1.93	0.75	72.1	6.0	5.10	2.3	2.3	0.0023	16
		6	SLEx-90S-6	910	2.26	2.15	2.07	0.72	70.0	5.5	7.80	2.0	2.1	0.0043	23
		8	SLEx-100L1-8	690	2.78	2.64	2.54	0.67	61.2	4.0	10.3	1.8	2.0	0.0067	33
1.1	1.5	2	SLEx-80M2-2	2830	2.68	2.55	2.46	0.83	75.0	7.0	9.00	2.2	2.3	0.0013	17
		4	SLEx-90S-4	1400	2.97	2.82	2.72	0.75	75.0	6.0	7.50	2.3	2.3	0.0031	20
		6	SLEx-90L-6	910	3.14	2.98	2.88	0.73	72.9	5.5	11.5	2.0	2.1	0.0058	25
		8	SLEx-100L2-8	690	3.64	3.46	3.34	0.69	66.5	5.0	15.2	1.8	2.0	0.0093	38
1.5	2	2	SLEx-90S-2	2840	3.51	3.34	3.22	0.84	77.2	7.0	11.8	2.2	2.3	0.0020	19
		4	SLEx-90L-4	1400	3.94	3.74	3.60	0.75	77.2	6.0	10.2	2.3	2.3	0.0041	23
		6	SLEx-100L-6	940	4.10	3.89	3.75	0.74	75.2	5.5	15.2	2.0	2.1	0.0109	33
		8	SLEx-112M-8	680	4.71	4.47	4.31	0.69	70.2	5.0	21.0	1.8	2.0	0.0143	50
2.2	3	2	SLEx-90L-2	2840	4.93	4.69	4.52	0.85	79.7	7.0	16.5	2.2	2.3	0.0026	23
		4	SLEx-100L1-4	1430	5.18	4.92	4.74	0.81	79.7	7.0	14.6	2.3	2.3	0.0099	29
		6	SLEx-112M-6	940	5.81	5.52	5.32	0.74	77.7	6.5	22.3	2.0	2.1	0.0150	37
		8	SLEx-132S-8	710	6.34	6.03	5.81	0.71	74.2	6.0	29.5	1.8	2.0	0.0320	63
3	4	2	SLEx-100L-2	2870	6.43	6.11	5.89	0.87	81.5	7.5	21.3	2.2	2.3	0.0036	31
		4	SLEx-100L2-4	1430	6.82	6.48	6.25	0.82	81.5	7.0	20.0	2.3	2.3	0.0131	35
		6	SLEx-132S-6	960	7.73	7.34	7.08	0.74	79.7	6.5	29.8	2.1	2.1	0.0341	53
		8	SLEx-132M-8	710	8.11	7.70	7.43	0.73	77.0	6.0	40.3	1.8	2.0	0.0550	79
4	5.5	2	SLEx-112M-2	2890	8.31	7.90	7.61	0.88	83.1	7.5	27.4	2.2	2.3	0.0068	38
		4	SLEx-112M-4	1430	8.92	8.47	8.17	0.82	83.1	7.0	26.7	2.3	2.3	0.0160	40
		6	SLEx-132M1-6	960	10.1	9.59	9.24	0.74	81.4	6.5	39.7	2.1	2.1	0.0410	62
		8	SLEx-160M1-8	720	10.5	10.0	9.63	0.73	79.2	6.0	53.0	1.9	2.0	0.0670	90
5.5	7.5	2	SLEx-132S1-2	2900	11.2	10.7	10.3	0.88	84.7	7.5	36.8	2.2	2.3	0.0126	57
		4	SLEx-132S-4	1440	12.0	11.4	11.0	0.82	84.7	7.0	36.4	2.3	2.3	0.0339	58
		6	SLEx-132M2-6	960	13.4	12.7	12.3	0.75	83.1	6.5	54.7	2.1	2.1	0.0529	72
		8	SLEx-160M2-8	720	13.9	13.2	12.7	0.74	81.4	6.0	72.9	2.0	2.0	0.0940	106
7.5	10	2	SLEx-132S2-2	2900	15.1	14.3	13.8	0.88	86.0	7.5	49.7	2.2	2.3	0.0145	63
		4	SLEx-132M-4	1440	16.0	15.2	14.6	0.83	86.0	7.0	49.7	2.3	2.3	0.0424	70
		6	SLEx-160M-6	970	17.5	16.6	16.0	0.77	84.7	6.5	73.8	2.0	2.1	0.105	98
		8	SLEx-160L-8	720	18.3	17.4	16.7	0.75	83.1	6.0	99.4	2.0	2.0	0.134	124
11	15	2	SLEx-160M1-2	2930	21.4	20.4	19.6	0.89	87.6	7.5	69.7	2.2	2.3	0.048	107
		4	SLEx-160M-4	1460	22.7	21.6	20.8	0.84	87.6	7.0	71.9	2.2	2.3	0.092	106
		6	SLEx-160L-6	970	24.8	23.6	22.7	0.78	86.4	6.5	108	2.0	2.1	0.138	110
		8	SLEx-180L-8	730	25.9	24.6	23.7	0.76	85.0	6.5	144	2.0	2.0	0.258	167
15	20	2	SLEx-160M2-2	2930	28.9	27.4	26.4	0.89	88.7	7.5	94.1	2.2	2.3	0.057	117
		4	SLEx-160L-4	1460	30.2	28.7	27.7	0.85	88.7	7.0	98.1	2.2	2.3	0.118	125
		6	SLEx-180L-6	970	32.1	30.5	29.4	0.81	87.7	7.0	148	2.0	2.1	0.220	166
		8	SLEx-200L-8	730	34.8	33.0	31.9	0.76	86.2	6.6	196	2.0	2.0	0.410	208
18.5	25	2	SLEx-160L-2	2930	35.4	33.6	32.4	0.89	89.3	7.5	115	2.0	2.3	0.064	130
		4	SLEx-180M-4	1470	36.6	34.8	33.5	0.86	89.3	7.5	120	2.2	2.3	0.164	156
		6	SLEx-200L1-6	970	39.2	37.2	35.9	0.81	88.6	7.0	182	2.1	2.1	0.349	205
		8	SLEx-225S-8	730	42.6	40.4	39.0	0.76	86.9	6.6	242	1.9	2.0	0.620	252

Note: 1. I_{FL} = Full Load Current; I_{LR} = Locked Rotor Current; T_{FL} = Full Load Torque, T_{LR} = Locked Rotor Torque; T_M = Maximum or Breakdown Torque.
2. The data above is based on 400V design, 380V and 415V data are the reference values.
3. Tolerance according to IEC60034-1; Current tolerance: ±3%
4. All technical details are subject to change without prior notice.

JEP(IIB)/JEC(IIC) (SLEx IE1) PERFORMANCE DATA AT 50HZ

Synchronous speed (2Pole/3000RPM, 4Pole/1500RPM, 6Pole/1000RPM, 8Pole/750RPM)

Rated Output		Pole	Model	Rated Speed (RPM)	Rated Current (I_{FL})			Power Factor (cosØ)	Eff (%)	I_{LR}/I_{FL}	T_{FL} (Nm)	T_{LR}/T_{FL}	T_M/T_{FL}	Moment of Inertia ($kg.m^2$)	Weight (kg)
kW	HP				380V (A)	400V (A)	415V (A)								
22	30	2	SLEx-180M-2	2940	41.8	39.7	38.3	0.89	89.9	7.5	136	2.0	2.3	0.098	170
		4	SLEx-180L-4	1470	43.2	41.1	39.6	0.86	89.9	7.5	143	2.2	2.3	0.177	179
		6	SLEx-200L2-6	970	45.7	43.4	41.8	0.82	89.2	7.0	217	2.1	2.1	0.399	223
		8	SLEx-225M-8	740	49.0	46.6	44.9	0.78	87.4	6.6	284	1.9	2.0	0.670	280
30	40	2	SLEx-200L1-2	2950	56.5	53.6	51.7	0.89	90.7	7.5	183	2.0	2.3	0.161	220
		4	SLEx-200L-4	1470	58.4	55.5	53.5	0.86	90.7	7.2	195	2.2	2.3	0.288	232
		6	SLEx-225M-6	970	62.4	59.3	57.1	0.81	90.2	7.0	295	2.0	2.1	0.653	282
		8	SLEx-250M-8	740	65.3	62.1	59.8	0.79	88.3	6.5	387	1.9	2.0	1.12	380
37	50	2	SLEx-200L2-2	2950	69.3	65.8	63.4	0.89	91.2	7.5	224	2.0	2.3	0.191	236
		4	SLEx-225S-4	1470	71.7	68.1	65.6	0.86	91.2	7.2	240	2.2	2.3	0.536	276
		6	SLEx-250M-6	980	73.7	70.0	67.5	0.84	90.8	7.0	361	2.1	2.1	0.941	350
		8	SLEx-280S-8	740	80.1	76.1	73.4	0.79	88.8	6.6	478	1.9	2.0	1.30	530
45	60	2	SLEx-225M-2	2950	83.8	79.6	76.7	0.89	91.7	7.5	271	2.0	2.3	0.271	293
		4	SLEx-225M-4	1470	86.7	82.4	79.4	0.86	91.7	7.2	292	2.2	2.3	0.613	309
		6	SLEx-280S-6	980	87.0	82.6	79.6	0.86	91.4	7.0	439	2.1	2.0	1.63	449
		8	SLEx-280M-8	740	97.0	92.2	88.8	0.79	89.2	6.6	581	1.9	2.0	1.60	610
55	75	2	SLEx-250M-2	2965	102	96.9	93.4	0.89	92.1	7.5	329	2.0	2.3	0.338	362
		4	SLEx-250M-4	1480	106	100	97.0	0.86	92.1	7.2	355	2.2	2.3	0.758	402
		6	SLEx-280M-6	980	106	100	96.8	0.86	91.9	7.0	536	2.1	2.0	1.87	532
		8	SLEx-315S-8	740	115	109	105	0.81	89.7	6.6	710	1.8	2.0	4.85	900
75	100	2	SLEx-280S-2	2970	138	131	126	0.89	92.7	7.5	444	2.0	2.3	0.647	510
		4	SLEx-280S-4	1480	141	134	129	0.87	92.7	7.2	484	2.2	2.3	1.54	484
		6	SLEx-315S-6	980	145	138	133	0.85	92.6	7.0	731	2.0	2.0	3.66	850
		8	SLEx-315M-8	740	156	148	143	0.81	90.3	6.2	968	1.8	2.0	6.00	980
90	125	2	SLEx-280M-2	2970	165	157	151	0.89	93.0	7.5	531	2.0	2.3	0.765	540
		4	SLEx-280M-4	1480	169	161	155	0.87	93.0	7.2	581	2.2	2.3	2.50	590
		6	SLEx-315M-6	980	175	166	160	0.84	92.9	7.0	877	2.0	2.0	4.15	940
		8	SLEx-315L1-8	740	184	175	168	0.82	90.7	6.4	1161	1.8	2.0	6.90	1000
110	150	2	SLEx-315S-2	2980	199	189	182	0.90	93.3	7.1	638	1.8	2.2	1.36	920
		4	SLEx-315S-4	1490	204	193	186	0.88	93.3	6.9	705	2.1	2.2	3.12	902
		6	SLEx-315L1-6	980	211	200	193	0.85	93.3	6.7	1072	2.0	2.0	5.06	1000
		8	SLEx-315L2-8	740	224	213	205	0.82	91.1	6.4	1420	1.8	2.0	7.8	1070
132	180	2	SLEx-315M-2	2980	238	226	218	0.90	93.5	7.1	763	1.8	2.2	1.50	970
		4	SLEx-315M-4	1490	244	232	223	0.88	93.5	6.9	846	2.1	2.2	3.49	1000
		6	SLEx-315L2-6	980	249	237	228	0.86	93.5	6.7	1286	2.0	2.0	5.98	1030
		8	SLEx-355S-8	740	267	254	245	0.82	91.5	6.4	1704	1.8	2.0	11.8	1480
160	215	2	SLEx-315L1-2	2980	288	274	264	0.90	93.8	7.1	923	1.8	2.2	1.70	1030
		4	SLEx-315L1-4	1490	291	277	267	0.89	93.8	6.9	1026	2.1	2.2	3.97	1030
		6	SLEx-355S-6	990	298	283	273	0.87	93.8	6.7	1543	1.9	2.0	11.6	1476
		8	SLEx-355M-8	740	323	306	295	0.82	91.9	6.4	2065	1.8	2.0	11.8	1550
200	270	2	SLEx-315L2-2	2980	355	337	325	0.91	94.0	7.1	1138	1.8	2.2	1.92	1090
		4	SLEx-315L2-4	1490	363	345	333	0.89	94.0	6.9	1282	2.1	2.2	4.66	1140
		6	SLEx-355M2-6	990	372	353	340	0.87	94.0	6.7	1785	1.9	2.0	12.5	1580
		8	SLEx-355L2-8	740	396	376	362	0.83	92.5	6.4	2581	1.8	2.0	17.4	1800
220	295	2	SLEx-355M1-2	2980	391	371	358	0.91	94.0	7.1	1253	1.6	2.2	2.67	1600
		4	SLEx-355L2-4	1490	395	375	362	0.90	94.0	6.9	1410	2.1	2.2	6.01	1690
		6	SLEx-355L1-6	990	409	388	374	0.87	94.0	6.7	1929	1.9	2.0	13.4	1740
250	340	2	SLEx-355M2-2	2980	444	422	407	0.91	94.0	7.1	1423	1.6	2.2	2.67	1620
		4	SLEx-355M2-4	1490	449	427	411	0.90	94.0	6.9	1602	2.1	2.2	6.52	1720
		6	SLEx-355L2-6	990	464	441	425	0.87	94.0	6.7	2122	1.9	2.0	15.1	1800
280	380	2	SLEx-355L1-2	2980	497	472	455	0.91	94.0	7.1	1593	1.6	2.2	3.14	1820
		4	SLEx-355L1-4	1490	503	478	460	0.90	94.0	6.9	1795	2.1	2.2	7.32	1800
315	425	2	SLEx-355L2-2	2980	560	532	512	0.91	94.0	7.1	1795	1.6	2.2	3.77	1850
		4	SLEx-355M1-4	1490	566	537	518	0.90	94.0	6.9	2019	2.1	2.2	8.20	1850

Note: 1. I_{FL} = Full Load Current; I_{LR} = Locked Rotor Current; T_{FL} = Full Load Torque, T_{LR} = Locked Rotor Torque; T_M = Maximum or Breakdown Torque.
2. The data above is based on 400V design, 380V and 415V data are the reference values.
3. Tolerance according to IEC60034-1; Current tolerance: ±3%
4. All technical details are subject to change without prior notice.

JEP(IIB)/JEC(IIC) (SLEx IE1) PERFORMANCE DATA AT 60HZ

Synchronous speed (2Pole/3600RPM, 4Pole/1800RPM, 6Pole/1200RPM, 8Pole/900RPM)

Rated Output		Pole	Model	Rated Speed (RPM)	Rated Current (I_{FL})			Power Factor (cosØ)	Eff (%)	I_{LR}/I_{FL}	T_{FL} (Nm)	T_{LR}/T_{FL}	T_M/T_{FL}	Moment of Inertia ($kg.m^2$)	Weight (kg)
kW	HP				440V (A)	460V (A)	480V (A)								
0.22	0.3	8	SLEx-80M1-8	755	1.18	1.13	1.08	0.60	40.0	3.3	2.70	1.8	1.9	0.0027	16
0.30	0.4	8	SLEx-80M2-8	765	1.30	1.24	1.19	0.60	50.5	3.3	3.70	1.8	1.9	0.0032	17
0.44	0.6	6	SLEx-80M1-6	1065	1.36	1.30	1.25	0.69	62.0	4.7	3.90	1.9	2.1	0.0021	15
		8	SLEx-90S-8	790	1.69	1.62	1.55	0.60	57.5	4.0	5.30	1.8	1.9	0.0043	23
0.66	0.9	4	SLEx-80M1-4	1665	1.58	1.51	1.45	0.74	74.0	5.2	3.70	2.3	2.3	0.0019	15
		6	SLEx-80M2-6	1065	1.85	1.77	1.69	0.71	66.0	4.7	5.90	1.9	2.1	0.0031	16
		8	SLEx-90L-8	790	2.43	2.32	2.22	0.60	59.5	4.0	7.90	1.8	2.0	0.0055	25
0.90	1.2	2	SLEx-80M1-2	3395	1.95	1.86	1.78	0.82	74.0	6.1	6.40	2.2	2.3	0.0010	15
		4	SLEx-80M2-4	1665	2.07	1.98	1.90	0.74	77.0	6.0	5.10	2.3	2.3	0.0023	16
		6	SLEx-90S-6	1090	2.31	2.21	2.12	0.71	72.0	5.5	7.80	2.0	2.1	0.0043	23
		8	SLEx-100L1-8	825	2.80	2.67	2.56	0.66	64.0	4.0	10.3	1.8	2.0	0.0067	33
1.32	1.8	2	SLEx-80M2-2	3395	2.69	2.57	2.47	0.82	78.5	7.0	9.00	2.2	2.3	0.0013	17
		4	SLEx-90S-4	1680	2.96	2.83	2.72	0.74	79.0	6.0	7.50	2.3	2.3	0.0031	20
		6	SLEx-90L-6	1090	3.21	3.07	2.94	0.72	75.0	5.5	11.5	2.0	2.1	0.0058	25
		8	SLEx-100L2-8	825	3.47	3.31	3.18	0.68	73.5	5.0	15.2	1.8	2.0	0.0093	38
1.80	2.4	2	SLEx-90S-2	3405	3.51	3.36	3.22	0.83	81.0	7.0	11.8	2.2	2.3	0.0020	19
		4	SLEx-90L-4	1680	3.92	3.75	3.59	0.74	81.5	6.0	10.2	2.3	2.3	0.0041	23
		6	SLEx-100L-6	1125	4.20	4.02	3.85	0.73	77.0	5.5	15.2	2.0	2.1	0.0109	33
		8	SLEx-112M-8	815	4.51	4.31	4.14	0.68	77.0	5.0	21.0	1.8	2.0	0.0143	50
2.64	3.5	2	SLEx-90L-2	3405	5.06	4.84	4.64	0.84	81.5	7.0	16.5	2.2	2.3	0.0026	23
		4	SLEx-100L1-4	1715	5.22	4.99	4.78	0.80	83.0	7.0	14.6	2.3	2.3	0.0099	29
		6	SLEx-112M-6	1125	6.05	5.78	5.54	0.73	78.5	6.5	22.3	2.0	2.1	0.0150	37
		8	SLEx-132S-8	850	6.34	6.07	5.82	0.70	78.0	6.0	29.5	1.8	2.0	0.0320	63
3.60	4.8	2	SLEx-100L-2	3440	6.74	6.45	6.18	0.86	81.5	7.5	21.3	2.2	2.3	0.0036	31
		4	SLEx-100L2-4	1715	7.03	6.72	6.44	0.81	83.0	7.0	20.0	2.3	2.3	0.0131	35
		6	SLEx-132S-6	1150	8.24	7.89	7.56	0.73	78.5	6.5	29.8	2.1	2.1	0.0341	53
		8	SLEx-132M-8	850	8.41	8.05	7.71	0.72	78.0	6.0	40.3	1.8	2.0	0.0550	79
4.80	6.4	2	SLEx-112M-2	3465	8.57	8.20	7.85	0.87	84.5	7.5	27.4	2.2	2.3	0.0068	38
		4	SLEx-112M-4	1715	9.15	8.75	8.39	0.81	85.0	7.0	26.7	2.3	2.3	0.0160	40
		6	SLEx-132M1-6	1150	10.3	9.90	9.50	0.73	83.5	6.5	39.7	2.1	2.1	0.0410	62
		8	SLEx-160M1-8	860	10.9	10.5	10.00	0.72	80.0	6.0	53.0	1.9	2.0	0.0670	90
6.60	8.8	2	SLEx-132S1-2	3480	11.6	11.1	10.6	0.87	86.0	7.5	36.8	2.2	2.3	0.0126	57
		4	SLEx-132S-4	1725	12.3	11.8	11.3	0.81	87.0	7.0	36.4	2.3	2.3	0.0339	58
		6	SLEx-132M2-6	1150	13.8	13.2	12.6	0.74	85.0	6.5	54.7	2.1	2.1	0.0529	72
		8	SLEx-160M2-8	860	14.1	13.5	13.0	0.73	84.0	6.0	72.9	2.0	2.0	0.0940	106
9.00	12	2	SLEx-132S2-2	3480	15.5	14.8	14.2	0.87	87.5	7.5	49.7	2.2	2.3	0.0145	63
		4	SLEx-132M-4	1725	16.5	15.7	15.1	0.82	87.5	7.0	49.7	2.3	2.3	0.0424	70
		6	SLEx-160M-6	1160	18.1	17.3	16.6	0.76	86.0	6.5	73.8	2.0	2.1	0.105	98
		8	SLEx-160L-8	860	18.8	18.0	17.2	0.74	85.0	6.0	99.4	2.0	2.0	0.134	124
13.2	18	2	SLEx-160M1-2	3515	22.5	21.5	20.6	0.88	87.5	7.5	69.7	2.2	2.3	0.048	107
		4	SLEx-160M-4	1750	23.6	22.6	21.6	0.83	88.5	7.0	71.9	2.2	2.3	0.092	106
		6	SLEx-160L-6	1160	25.3	24.2	23.2	0.77	89.0	6.5	108	2.0	2.1	0.138	110
		8	SLEx-180L-8	875	26.4	25.3	24.2	0.75	87.5	6.5	144	2.0	2.0	0.258	167
18.0	24	2	SLEx-160M2-2	3515	30.3	29.0	27.8	0.88	88.5	7.5	94.1	2.2	2.3	0.057	117
		4	SLEx-160L-4	1750	31.4	30.1	28.8	0.84	89.5	7.0	98.1	2.2	2.3	0.118	125
		6	SLEx-180L-6	1160	33.0	31.6	30.2	0.80	89.5	7.0	148	2.0	2.1	0.220	166
		8	SLEx-200L-8	875	35.6	34.0	32.6	0.75	88.5	6.6	196	2.0	2.0	0.410	208
22.2	30	2	SLEx-160L-2	3515	37.0	35.4	33.9	0.88	89.5	7.5	115	2.0	2.3	0.064	130
		4	SLEx-180M-4	1760	37.9	36.2	34.7	0.85	90.5	7.5	120	2.2	2.3	0.164	156
		6	SLEx-200L1-6	1160	40.4	38.6	37.0	0.80	90.2	7.0	182	2.1	2.1	0.349	205
		8	SLEx-225S-8	875	43.9	42.0	40.2	0.75	88.5	6.6	242	1.9	2.0	0.620	252

Note: 1. I_{FL} = Full Load Current; I_{LR} = Locked Rotor Current; T_{FL} = Full Load Torque, T_{LR} = Locked Rotor Torque; T_M = Maximum or Breakdown Torque.
2. The data above is based on 440V design, 460V and 480V data are the reference values.
3. Tolerance according to IEC60034-1; Current tolerance: ±3%
4. All technical details are subject to change without prior notice.

JEP(IIB)/JEC(IIC) (SLEx IE1) PERFORMANCE DATA AT 60HZ

Synchronous speed (2Pole/3600RPM, 4Pole/1800RPM, 6Pole/1200RPM, 8Pole/900RPM)

Rated Output		Pole	Model	Rated Speed (RPM)	Rated Current (I_{FL})			Power Factor (cosØ)	Eff (%)	I_{LR}/I_{FL}	T_{FL} (Nm)	T_{LR}/T_{FL}	T_M/T_{FL}	Moment of Inertia ($kg.m^2$)	Weight (kg)
kW	HP				440V (A)	460V (A)	480V (A)								
26.4	35	2	SLEx-180M-2	3525	44.0	42.1	40.3	0.88	89.5	7.5	136	2.0	2.3	0.098	170
		4	SLEx-180L-4	1760	44.8	42.8	41.1	0.85	91.0	7.5	143	2.2	2.3	0.177	179
		6	SLEx-200L2-6	1160	47.0	45.0	43.1	0.81	91.0	7.0	217	2.1	2.1	0.399	223
		8	SLEx-225M-8	885	49.9	47.7	45.7	0.77	90.2	6.6	284	1.9	2.0	0.670	280
36.0	48	2	SLEx-200L1-2	3540	59.5	56.9	54.6	0.88	90.2	7.5	183	2.0	2.3	0.161	220
		4	SLEx-200L-4	1760	60.6	58.0	55.6	0.85	91.7	7.2	195	2.2	2.3	0.288	232
		6	SLEx-225M-6	1160	64.4	61.6	59.0	0.80	91.7	7.0	295	2.0	2.1	0.653	282
		8	SLEx-250M-8	885	67.1	64.2	61.6	0.78	90.2	6.5	387	1.9	2.0	1.12	380
44.4	60	2	SLEx-200L2-2	3540	72.4	69.2	66.3	0.88	91.5	7.5	224	2.0	2.3	0.191	236
		4	SLEx-225S-4	1760	74.2	71.0	68.0	0.85	92.4	7.2	240	2.2	2.3	0.536	276
		6	SLEx-250M-6	1175	76.6	73.2	70.2	0.83	91.7	7.0	361	2.1	2.1	0.941	350
		8	SLEx-280S-8	885	82.1	78.5	75.2	0.78	91.0	6.6	478	1.9	2.0	1.30	530
54.0	72	2	SLEx-225M-2	3540	88	84	80.5	0.88	91.7	7.5	271	2.0	2.3	0.271	293
		4	SLEx-225M-4	1760	90	86	82.0	0.85	93.0	7.2	292	2.2	2.3	0.613	309
		6	SLEx-280S-6	1175	91	87	83	0.85	91.7	7.0	439	2.1	2.0	1.63	449
		8	SLEx-280M-8	885	100	95	92	0.78	91.0	6.6	581	1.9	2.0	1.60	610
66.0	88	2	SLEx-250M-2	3555	107	102	98	0.88	92.4	7.5	329	2.0	2.3	0.338	362
		4	SLEx-250M-4	1775	110	105	100	0.85	93.0	7.2	355	2.2	2.3	0.758	402
		6	SLEx-280M-6	1175	111	106	101	0.85	92.1	7.0	536	2.1	2.0	1.87	532
		8	SLEx-315S-8	885	118	113	108	0.80	91.5	6.6	710	1.8	2.0	4.85	900
90.0	120	2	SLEx-280S-2	3560	144	138	132	0.88	93.0	7.5	444	2.0	2.3	0.647	510
		4	SLEx-280S-4	1775	147	141	135	0.86	93.2	7.2	484	2.2	2.3	1.54	484
		6	SLEx-315S-6	1175	151	145	139	0.84	93.0	7.0	731	2.0	2.0	3.66	850
		8	SLEx-315M-8	885	160	153	147	0.80	92.0	6.2	968	1.8	2.0	6.00	980
108	144	2	SLEx-280M-2	3560	173	166	159	0.88	93.0	7.5	531	2.0	2.3	0.765	540
		4	SLEx-280M-4	1775	177	169	162	0.86	93.2	7.2	581	2.2	2.3	2.50	590
		6	SLEx-315M-6	1175	184	176	168	0.83	93.0	7.0	877	2.0	2.0	4.15	940
		8	SLEx-315L1-8	885	189	181	173	0.81	92.5	6.4	1161	1.8	2.0	6.90	1000
132	176	2	SLEx-315S-2	3575	209	200	192	0.89	93.0	7.1	638	1.8	2.2	1.36	920
		4	SLEx-315S-4	1785	213	204	195	0.87	93.5	6.9	705	2.1	2.2	3.12	902
		6	SLEx-315L1-6	1175	219	210	201	0.84	94.1	6.7	1072	2.0	2.0	5.06	1000
		8	SLEx-315L2-8	885	231	221	212	0.81	92.5	6.4	1420	1.8	2.0	7.80	1070
158	211	2	SLEx-315M-2	3575	250	239	229	0.89	93.3	7.1	763	1.8	2.2	1.50	970
		4	SLEx-315M-4	1785	254	243	233	0.87	94.1	6.9	846	2.1	2.2	3.49	1000
		6	SLEx-315L2-6	1175	260	249	238	0.85	94.1	6.7	1286	2.0	2.0	5.98	1030
		8	SLEx-355S-8	885	277	265	254	0.81	92.5	6.4	1704	1.8	2.0	11.8	1480
192	256	2	SLEx-315L1-2	3575	301	288	276	0.89	94.1	7.1	923	1.8	2.2	1.70	1030
		4	SLEx-315L1-4	1785	303	290	278	0.88	94.5	6.9	1026	2.1	2.2	3.97	1030
		6	SLEx-355S-6	1185	311	298	285	0.86	94.1	6.7	1543	1.9	2.0	11.6	1476
		8	SLEx-355M-8	885	336	322	308	0.81	92.5	6.4	2065	1.8	2.0	11.8	1550
240	320	2	SLEx-315L2-2	3575	372	356	341	0.90	94.1	7.1	1138	1.8	2.2	1.92	1090
		4	SLEx-315L2-4	1785	379	362	347	0.88	94.5	6.9	1282	2.1	2.2	4.66	1140
		6	SLEx-355M2-6	1185	389	372	357	0.86	94.1	6.7	1785	1.9	2.0	12.5	1580
		8	SLEx-355L2-8	885	415	397	381	0.82	92.5	6.4	2581	1.8	2.0	17.4	1800
264	352	2	SLEx-355M1-2	3575	409	391	375	0.90	94.1	7.1	1253	1.6	2.2	2.67	1600
		4	SLEx-355L2-4	1785	412	394	378	0.89	94.5	6.9	1410	2.1	2.2	6.01	1690
		6	SLEx-355L1-6	1185	428	409	392	0.86	94.1	6.7	1929	1.9	2.0	13.4	1740
300	400	2	SLEx-355M2-2	3575	465	445	426	0.90	94.1	7.1	1423	1.6	2.2	2.67	1620
		4	SLEx-355M2-4	1785	468	448	429	0.89	94.5	6.9	1602	2.1	2.2	6.52	1720
		6	SLEx-355L2-6	1185	486	465	446	0.86	94.1	6.7	2122	1.9	2.0	15.1	1800
336	448	2	SLEx-355L1-2	3575	521	498	477	0.90	94.1	7.1	1593	1.6	2.2	3.14	1820
		4	SLEx-355L1-4	1785	524	501	481	0.89	94.5	6.9	1795	2.1	2.2	7.32	1800
378	504	2	SLEx-355L2-2	3576	586	560	537	0.90	94.1	7.1	1795	1.6	2.2	3.77	1850
		4	SLEx-355M1-4	1785	590	564	541	0.89	94.5	6.9	2019	2.1	2.2	8.20	1850

Note: 1. I_{FL} = Full Load Current; I_{LR} = Locked Rotor Current; T_{FL} = Full Load Torque, T_{LR} = Locked Rotor Torque; T_M = Maximum or Breakdown Torque.
2. The data above is based on 440V design, 460V and 480V data are the reference values.
3. Tolerance according to IEC60034-1; Current tolerance: ±3%
4. All technical details are subject to change without prior notice.

JWP(IIB)/JWC(IIC) (SLEx IE2) PERFORMANCE DATA AT 50HZ

Synchronous speed (2Pole/3000RPM, 4Pole/1500RPM, 6Pole/1000RPM, 8Pole/750RPM)

Rated Output		Pole	Model	Rated Speed (RPM)	Rated Current (I_{FL})			Power Factor (cosØ)	Eff (%)	I_{LR}/I_{FL}	T_{FL} (Nm)	T_{LR}/T_{FL}	T_M/T_{FL}	Moment of Inertia ($kg.m^2$)	Weight (kg)
kW	HP				380V (A)	400V (A)	415V (A)								
0.18	0.25	8	SLEx-80M1-8	660	0.98	0.93	0.89	0.61	45.9	3.3	2.60	1.8	1.9	0.0021	17
0.25	0.34	8	SLEx-80M2-8	660	1.23	1.17	1.13	0.61	50.6	3.3	3.62	1.8	2.0	0.0028	18
0.37	0.5	6	SLEx-80M1-6	940	1.19	1.13	1.09	0.70	67.6	5.5	3.76	1.9	2.0	0.0036	16
		8	SLEx-90S-8	680	1.64	1.56	1.50	0.61	56.1	4.0	5.20	1.8	2.0	0.0055	25
0.55	0.75	4	SLEx-80M1-4	1400	1.45	1.37	1.32	0.75	77.1	6.1	3.75	2.3	2.3	0.0028	17
		6	SLEx-80M2-6	940	1.59	1.51	1.45	0.72	73.1	5.5	5.59	1.9	2.0	0.0042	17
		8	SLEx-90L-8	675	2.22	2.11	2.03	0.61	61.7	4.0	7.78	1.8	2.0	0.0066	27
0.75	1.0	2	SLEx-80M1-2	2870	1.80	1.71	1.64	0.82	77.4	6.8	2.50	2.3	2.3	0.0010	16
		4	SLEx-80M2-4	1430	1.88	1.79	1.72	0.76	79.6	6.6	5.01	2.3	2.3	0.0030	18
		6	SLEx-90S-6	945	2.11	2.01	1.94	0.71	75.9	5.8	7.58	2.0	2.1	0.0055	24
		8	SLEx-100L1-8	705	2.57	2.44	2.35	0.67	66.2	4.0	10.1	1.8	2.0	0.0085	34
1.1	1.5	2	SLEx-80M2-2	2875	2.53	2.40	2.32	0.83	79.6	7.1	3.65	2.3	2.3	0.0016	18
		4	SLEx-90S-4	1430	2.67	2.53	2.44	0.77	81.4	6.8	7.35	2.3	2.3	0.0040	22
		6	SLEx-90L-6	950	2.97	2.82	2.72	0.72	78.1	5.9	11.1	2.0	2.1	0.0077	27
		8	SLEx-100L2-8	700	3.42	3.25	3.13	0.69	70.8	5.0	15.0	1.8	2.0	0.0111	39
1.5	2.0	2	SLEx-90S-2	2880	3.34	3.17	3.06	0.84	81.3	7.3	4.97	2.3	2.3	0.0023	21
		4	SLEx-90L-4	1430	3.53	3.35	3.23	0.78	82.8	7.0	10.0	2.3	2.3	0.0052	25
		6	SLEx-100L-6	950	3.97	3.77	3.63	0.72	79.8	5.9	15.1	2.0	2.1	0.0137	34
		8	SLEx-112M-8	695	4.46	4.23	4.08	0.69	74.1	6.0	20.6	1.8	2.0	0.0159	52
2.2	3.0	2	SLEx-90L-2	2880	4.73	4.49	4.33	0.85	83.2	7.6	7.30	2.3	2.3	0.0031	25
		4	SLEx-100L1-4	1440	4.96	4.71	4.54	0.80	84.3	7.6	14.6	2.3	2.3	0.0098	30
		6	SLEx-112M-6	955	5.68	5.39	5.20	0.72	81.8	6.2	22.0	2.0	2.1	0.0208	38
		8	SLEx-132S-8	695	6.07	5.76	5.60	0.71	77.6	6.0	30.2	1.8	2.0	0.0333	65
3	4.0	2	SLEx-100L-2	2880	6.19	5.88	5.67	0.87	84.6	7.8	9.95	2.2	2.3	0.0051	33
		4	SLEx-100L2-4	1440	6.58	6.25	6.03	0.81	85.5	7.6	19.9	2.3	2.3	0.0131	35
		6	SLEx-132S-6	965	7.60	7.22	6.96	0.72	83.3	6.4	29.7	2.0	2.1	0.0369	55
		8	SLEx-132M-8	690	7.81	7.41	7.10	0.73	80.0	6.0	41.5	1.8	2.0	0.0462	81
4	5.5	2	SLEx-112M-2	2900	8.05	7.65	7.37	0.88	85.8	8.1	13.1	2.2	2.3	0.0082	40
		4	SLEx-112M-4	1455	8.66	8.23	7.93	0.81	86.6	7.8	26.3	2.3	2.3	0.0192	40
		6	SLEx-132M1-6	965	9.7	9.22	8.90	0.74	84.6	6.6	39.6	2.0	2.1	0.0518	62
		8	SLEx-160M1-8	725	10.2	9.66	9.30	0.73	81.9	6.0	52.7	1.9	2.0	0.0687	93
5.5	7.5	2	SLEx-132S1-2	2925	10.9	10.4	10.0	0.88	87.0	8.2	18.0	2.2	2.3	0.0160	59
		4	SLEx-132S-4	1460	11.6	11.0	10.6	0.82	87.7	7.9	36.0	2.0	2.3	0.0383	65
		6	SLEx-132M2-6	970	13.0	12.3	11.9	0.75	86.0	6.8	54.1	2.0	2.1	0.0684	70
		8	SLEx-160M2-8	725	13.5	12.8	12.3	0.74	83.8	6.0	72.4	2.0	2.0	0.0971	110
7.5	10	2	SLEx-132S2-2	2930	14.5	13.8	13.3	0.89	88.1	7.8	24.4	2.2	2.3	0.020	65
		4	SLEx-132M-4	1460	15.5	14.7	14.2	0.83	88.7	7.5	40.0	2.0	2.3	0.049	75
		6	SLEx-160M-6	970	16.8	15.9	15.3	0.78	87.5	6.8	73.8	2.0	2.1	0.125	108
		8	SLEx-160L-8	720	17.8	16.9	16.3	0.75	85.5	6.0	99.5	2.0	2.0	0.138	130
11	15	2	SLEx-160M1-2	2940	21.0	20.0	19.2	0.89	89.4	7.9	35.7	2.2	2.3	0.057	117
		4	SLEx-160M-4	1460	22.4	21.3	20.5	0.83	89.8	7.7	72.5	2.2	2.3	0.126	120
		6	SLEx-160L-6	975	23.9	22.7	21.8	0.79	88.7	6.9	108	2.0	2.1	0.166	125
		8	SLEx-180L-8	725	25.3	24.0	23.2	0.76	86.9	6.6	145	2.0	2.0	0.231	170
15	20	2	SLEx-160M2-2	2945	28.4	26.9	26.0	0.89	90.3	7.9	48.6	2.2	2.3	0.072	125
		4	SLEx-160L-4	1465	29.9	28.4	27.4	0.84	90.6	7.8	97.8	2.2	2.3	0.155	140
		6	SLEx-180L-6	975	31.0	29.4	28.4	0.82	89.7	7.3	147	2.0	2.1	0.286	175
		8	SLEx-200L-8	725	34.1	32.4	31.2	0.76	88.0	6.6	198	2.0	2.0	0.388	215
18.5	25	2	SLEx-160L-2	2945	34.7	33.0	31.8	0.89	90.9	8.0	60.0	2.2	2.3	0.084	140
		4	SLEx-180M-4	1465	36.3	34.4	33.2	0.85	91.2	7.8	121	2.0	2.3	0.224	180
		6	SLEx-200L1-6	980	38.9	36.9	35.6	0.80	90.4	7.2	180	2.0	2.1	0.421	223
		8	SLEx-225S-8	725	41.7	39.7	38.2	0.76	88.6	6.6	244	1.9	2.0	0.599	260

Note: 1. I_{FL} = Full Load Current; I_{LR} = Locked Rotor Current; T_{FL} = Full Load Torque, T_{LR} = Locked Rotor Torque; T_M = Maximum or Breakdown Torque.
2. The data above is based on 400V design, 380V and 415V data are the reference values.
3. Tolerance according to IEC60034-1; Current tolerance: ±3%
4. All technical details are subject to change without prior notice.

JWP(IIB)/JWC(IIC) (SLEx IE2) PERFORMANCE DATA AT 50HZ

Synchronous speed (2Pole/3000RPM, 4Pole/1500RPM, 6Pole/1000RPM, 8Pole/750RPM)

Rated Output		Pole	Model	Rated Speed (RPM)	Rated Current (I_{FL})			Power Factor (cosØ)	Eff (%)	I_{LR}/I_{FL}	T_{FL} (Nm)	T_{LR}/T_{FL}	T_M/T_{FL}	Moment of Inertia ($kg.m^2$)	Weight (kg)
kW	HP				380V (A)	400V (A)	415V (A)								
22	30	2	SLEx-180M-2	2950	41.1	39.1	37.7	0.89	91.3	8.1	71.2	2.2	2.3	0.125	180
		4	SLEx-180L-4	1470	42.9	40.8	39.3	0.85	91.6	7.8	140	2.0	2.3	0.268	200
		6	SLEx-200L2-6	980	45.4	43.1	41.6	0.81	90.9	7.3	214	2.0	2.1	0.485	232
		8	SLEx-225M-8	730	48.1	45.7	44.0	0.78	89.1	6.6	288	1.9	2.0	0.704	290
30	40	2	SLEx-200L1-2	2950	55.7	52.9	51.0	0.89	92.0	7.5	97.1	2.0	2.3	0.183	225
		4	SLEx-200L-4	1470	58.1	55.2	53.2	0.85	92.3	7.3	195	2.0	2.3	0.433	270
		6	SLEx-225M-6	985	60.6	57.6	55.5	0.82	91.7	6.8	291	2.0	2.1	0.669	280
		8	SLEx-250M-8	725	64.3	61.0	59.0	0.79	89.8	6.6	395	1.9	2.0	1.07	389
37	50	2	SLEx-200L2-2	2965	68.3	64.9	62.5	0.89	92.5	7.5	119	2.0	2.3	0.216	243
		4	SLEx-225S-4	1475	70.5	67.0	64.6	0.86	92.7	7.4	240	2.0	2.3	0.717	300
		6	SLEx-250M-6	985	73.5	69.8	67.0	0.83	92.2	7.0	359	2.0	2.1	1.17	365
		8	SLEx-280S-8	740	78.8	74.9	72.0	0.79	90.3	6.6	478	1.9	2.0	1.85	550
45	60	2	SLEx-225M-2	2965	82.7	78.6	75.7	0.89	92.9	7.5	145	2.2	2.3	0.300	300
		4	SLEx-225M-4	1475	85.4	81.1	78.0	0.86	93.1	7.4	291	2.0	2.3	0.847	320
		6	SLEx-280S-6	985	86.8	82.4	79.0	0.85	92.7	7.2	434	2.0	2.0	1.89	478
		8	SLEx-280M-8	740	95.4	90.7	87.0	0.79	90.7	6.6	581	1.9	2.0	2.15	650
55	75	2	SLEx-250M-2	2970	101	95.7	92.0	0.89	93.2	7.6	177	2.2	2.3	0.435	372
		4	SLEx-250M-4	1480	104	98.7	95.0	0.86	93.5	7.4	355	2.2	2.3	1.06	430
		6	SLEx-280M-6	985	104	99.2	96.0	0.86	93.1	7.2	533	2.0	2.0	2.28	553
		8	SLEx-315S-8	735	113	108	104	0.81	91.0	6.6	715	1.8	2.0	4.28	930
75	100	2	SLEx-280S-2	2975	136	130	125	0.89	93.8	6.9	241	1.8	2.3	0.766	520
		4	SLEx-280S-4	1480	139	132	128	0.87	94.0	6.9	484	2.0	2.3	2.01	580
		6	SLEx-315S-6	990	145	138	133	0.84	93.7	6.5	723	2.0	2.0	4.11	860
		8	SLEx-315M-8	735	154	146	141	0.81	91.6	6.6	974	1.8	2.0	5.70	1040
90	125	2	SLEx-280M-2	2975	163	155	150	0.89	94.1	6.9	289	1.8	2.3	0.896	560
		4	SLEx-280M-4	1485	169	159	153	0.87	94.2	6.9	579	2.0	2.3	2.25	650
		6	SLEx-315M-6	990	171	163	157	0.85	94.0	6.6	868	2.0	2.0	4.65	950
		8	SLEx-315L1-8	735	181	172	166	0.82	91.9	6.6	1169	1.8	2.0	6.77	1060
110	150	2	SLEx-315S-2	2980	107	187	180	0.90	94.3	7.0	353	1.8	2.2	1.71	940
		4	SLEx-315S-4	1485	203	193	186	0.87	94.5	7.0	707	2.0	2.2	3.24	940
		6	SLEx-315L1-6	990	209	198	191	0.85	94.3	6.6	1061	2.0	2.0	5.79	1120
		8	SLEx-315L2-8	740	221	220	202	0.82	92.3	6.4	1420	1.8	2.0	8.02	1070
132	180	2	SLEx-315M-2	2980	236	224	216	0.90	94.6	7.0	423	1.8	2.2	1.87	990
		4	SLEx-315M-4	1485	241	229	220	0.88	94.7	7.0	849	2.0	2.2	3.64	1030
		6	SLEx-315L2-6	990	247	234	226	0.86	94.6	6.6	1273	2.0	2.0	7.01	1180
		8	SLEx-355S-8	740	264	251	242	0.82	92.6	6.4	1704	1.8	2.0	12.4	1530
160	215	2	SLEx-315L1-2	2980	285	271	261	0.90	94.8	8.1	513	1.8	2.2	2.15	1050
		4	SLEx-315L1-4	1485	291	277	267	0.88	94.9	6.9	102	2.0	2.2	4.57	1150
		6	SLEx-355S-6	990	298	283	273	0.86	94.8	6.7	1543	2.0	2.0	10.9	1650
		8	SLEx-355M-8	740	319	303	292	0.82	93.0	6.4	2065	1.8	2.0	15.1	1570
200	270	2	SLEx-315L2-2	2980	355	338	325	0.90	95.0	8.1	641	1.8	2.2	2.46	1140
		4	SLEx-315L2-4	1485	359	341	329	0.89	95.1	7.1	1286	2.0	2.2	5.44	1200
		6	SLEx-355M2-6	990	372	353	341	0.86	95.0	6.8	1929	2.0	2.0	14.1	1800
		8	SLEx-355L2-8	740	392	372	359	0.83	93.5	6.4	2581	1.8	2.0	18.3	1820
220	295	2	SLEx-355M1-2	2980	391	371	358	0.90	95.0	8.1	705	1.6	2.2	3.61	1630
		4	SLEx-355L2-4	1485	395	375	362	0.89	95.1	7.1	1415	2.0	2.2	7.79	1660
		6	SLEx-355L1-6	990	409	389	375	0.86	95.0	6.8	2122	2.0	2.0	14.8	1860
250	340	2	SLEx-355M2-2	2980	444	422	407	0.90	95.0	7.1	801	1.6	2.2	3.96	1650
		4	SLEx-355M2-4	1490	449	427	411	0.89	95.1	7.1	1602	2.0	2.2	8.29	1750
		6	SLEx-355L2-6	990	465	442	426	0.86	95.0	6.8	2412	2.0	2.0	15.0	1900
280	380	2	SLEx-355L1-2	2980	498	473	456	0.90	95.0	7.2	897	1.6	2.2	4.36	1720
		4	SLEx-355L1-4	1490	503	477	460	0.89	95.1	7.1	1795	2.0	2.2	9.27	1830
315	425	2	SLEx-355L2-2	2980	560	532	513	0.90	95.0	7.2	1009	1.6	2.2	4.40	1800
		4	SLEx-355M1-4	1490	565	537	518	0.89	95.1	7.1	2019	2.0	2.2	10.3	2000

Note: 1. I_{FL} = Full Load Current; I_{LR} = Locked Rotor Current; T_{FL} = Full Load Torque, T_{LR} = Locked Rotor Torque; T_M = Maximum or Breakdown Torque.
2. The data above is based on 400V design, 380V and 415V data are the reference values.
3. Tolerance according to IEC60034-1; Current tolerance: ±3%
4. All technical details are subject to change without prior notice.

JWP(IIB)/JWC(IIC) (SLEx IE2) PERFORMANCE DATA AT 60HZ

Synchronous speed (2Pole/3600RPM, 4Pole/1800RPM, 6Pole/1200RPM, 8Pole/900RPM)

Rated Output		Pole	Model	Rated Speed (RPM)	Rated Current (I_{FL})			Power Factor (cosØ)	Eff (%)	I_{LR}/I_{FL}	T_{FL} (Nm)	T_{LR}/T_{FL}	T_M/T_{FL}	Moment of Inertia ($kg.m^2$)	Weight (kg)
kW	HP				440V (A)	460V (A)	480V (A)								
0.22	0.3	8	SLEx-80M1-8	790	1.03	0.98	0.94	0.60	46.0	3.3	2.60	1.8	1.9	0.0021	17
0.30	0.4	8	SLEx-80M2-8	790	1.26	1.21	1.16	0.60	52.0	3.3	3.62	1.8	2.0	0.0028	18
0.44	0.6	6	SLEx-80M1-6	1125	1.32	1.26	1.21	0.69	64.0	5.5	3.76	1.9	2.0	0.0036	16
		8	SLEx-90S-8	815	1.67	1.60	1.53	0.60	58.0	4.0	5.20	1.8	2.0	0.0055	25
0.66	0.9	4	SLEx-80M1-4	1680	1.55	1.48	1.42	0.74	75.5	6.1	3.75	2.3	2.3	0.0028	17
		6	SLEx-80M2-6	1125	1.79	1.72	1.64	0.71	68.0	5.5	5.59	1.9	2.0	0.0042	17
		8	SLEx-90L-8	810	2.33	2.23	2.13	0.60	62.0	4.0	7.78	1.8	2.0	0.0066	27
0.90	1.2	2	SLEx-80M1-2	3440	1.93	1.85	1.77	0.81	75.5	6.8	2.50	2.3	2.3	0.0010	16
		4	SLEx-80M2-4	1715	2.02	1.93	1.85	0.75	78.0	6.6	5.01	2.3	2.3	0.0030	18
		6	SLEx-90S-6	1130	2.31	2.21	2.12	0.70	73.0	5.8	7.58	2.0	2.1	0.0055	24
		8	SLEx-100L1-8	845	2.71	2.59	2.49	0.66	66.0	4.0	10.1	1.8	2.0	0.0085	34
1.32	1.8	2	SLEx-80M2-2	3450	2.56	2.45	2.35	0.82	82.5	7.1	3.65	2.3	2.3	0.0016	18
		4	SLEx-90S-4	1715	2.71	2.60	2.49	0.76	84.0	6.8	7.35	2.3	2.3	0.0040	22
		6	SLEx-90L-6	1140	2.85	2.73	2.62	0.71	85.5	5.9	11.1	2.0	2.1	0.0077	27
		8	SLEx-100L2-8	840	3.37	3.23	3.09	0.68	75.5	5.0	15.0	1.8	2.0	0.0111	39
1.80	2.4	2	SLEx-90S-2	3455	3.39	3.24	3.11	0.83	84.0	7.3	4.97	2.3	2.3	0.0023	21
		4	SLEx-90L-4	1715	3.65	3.49	3.35	0.77	84.0	7.0	10.0	2.3	2.3	0.0052	25
		6	SLEx-100L-6	1140	3.85	3.68	3.53	0.71	86.5	5.9	15.1	2.0	2.1	0.0137	34
		8	SLEx-112M-8	830	4.21	4.03	3.86	0.68	82.5	6.0	20.6	1.8	2.0	0.0159	52
2.64	3.5	2	SLEx-90L-2	3455	4.82	4.61	4.42	0.84	85.5	7.6	7.30	2.3	2.3	0.0031	25
		4	SLEx-100L1-4	1725	5.01	4.79	4.59	0.79	87.5	7.6	14.6	2.3	2.3	0.0098	30
		6	SLEx-112M-6	1155	5.58	5.33	5.11	0.71	87.5	6.2	22.0	2.0	2.1	0.0208	38
		8	SLEx-132S-8	830	5.89	5.64	5.40	0.70	84.0	6.0	30.2	1.8	2.0	0.0333	65
3.60	4.8	2	SLEx-100L-2	3455	6.42	6.15	5.89	0.86	85.5	7.8	9.95	2.2	2.3	0.0051	33
		4	SLEx-100L2-4	1725	6.75	6.46	6.19	0.80	87.5	7.6	19.9	2.3	2.3	0.0131	35
		6	SLEx-132S-6	1170	7.60	7.27	6.97	0.71	87.5	6.4	29.7	2.0	2.1	0.0369	55
		8	SLEx-132M-8	825	7.81	7.47	7.16	0.72	84.0	6.0	41.5	1.8	2.0	0.0462	81
4.80	6.4	2	SLEx-112M-2	3495	8.27	7.91	7.58	0.87	87.5	8.1	13.1	2.2	2.3	0.0082	40
		4	SLEx-112M-4	1745	9.00	8.61	8.30	0.80	87.5	7.8	26.3	2.3	2.3	0.0192	40
		6	SLEx-132M1-6	1170	9.90	9.40	9.00	0.73	87.5	6.6	39.6	2.0	2.1	0.0518	62
		8	SLEx-160M1-8	870	10.2	9.80	9.40	0.72	85.5	6.0	52.7	1.9	2.0	0.0687	93
6.60	8.8	2	SLEx-132S1-2	3520	11.3	10.8	10.3	0.87	88.5	8.2	18.0	2.2	2.3	0.0160	59
		4	SLEx-132S-4	1755	12.0	11.4	11.0	0.81	89.5	7.9	36.0	2.0	2.3	0.0383	65
		6	SLEx-132M2-6	1170	13.1	12.5	12.0	0.74	89.5	6.8	54.1	2.0	2.1	0.0684	70
		8	SLEx-160M2-8	870	13.9	13.3	12.7	0.73	85.5	6.0	72.4	2.0	2.0	0.0971	110
9.00	12	2	SLEx-132S2-2	3515	15.0	14.3	13.8	0.88	89.5	7.8	24.4	2.2	2.3	0.020	65
		4	SLEx-132M-4	1755	16.1	15.4	14.8	0.82	89.5	7.5	40.0	2.0	2.3	0.049	75
		6	SLEx-160M-6	1175	17.1	16.4	15.7	0.77	89.5	6.8	73.8	2.0	2.1	0.125	108
		8	SLEx-160L-8	860	18.0	17.3	16.5	0.74	88.5	6.0	99.5	2.0	2.0	0.138	130
13.2	18	2	SLEx-160M1-2	3540	21.8	20.9	20.0	0.88	90.2	7.9	35.7	2.2	2.3	0.057	117
		4	SLEx-160M-4	1760	23.2	22.2	21.3	0.82	91.0	7.7	72.5	2.2	2.3	0.126	120
		6	SLEx-160L-6	1175	24.6	23.6	22.6	0.78	90.2	6.9	108	2.0	2.1	0.166	125
		8	SLEx-180L-8	870	26.1	25.0	23.9	0.75	88.5	6.6	145	2.0	2.0	0.231	170
18.0	24	2	SLEx-160M2-2	3530	29.8	28.5	27.3	0.88	90.2	7.9	48.6	2.2	2.3	0.072	125
		4	SLEx-160L-4	1760	31.3	29.9	28.7	0.83	91.0	7.8	97.8	2.2	2.3	0.155	140
		6	SLEx-180L-6	1175	32.3	30.9	29.6	0.81	90.2	7.3	147	2.0	2.1	0.286	175
		8	SLEx-200L-8	870	35.2	33.7	32.3	0.75	89.5	6.6	198	2.0	2.0	0.388	215
22.2	30	2	SLEx-160L-2	3530	36.4	34.8	33.4	0.88	91.0	8.0	60.0	2.2	2.3	0.084	140
		4	SLEx-180M-4	1760	37.5	35.9	34.4	0.84	92.4	7.8	121	2.0	2.3	0.224	180
		6	SLEx-200L1-6	1180	40.2	38.5	36.9	0.79	91.7	7.2	180	2.0	2.1	0.421	223
		8	SLEx-225S-8	870	43.4	41.5	39.8	0.75	89.5	6.6	244	1.9	2.0	0.599	260

Note: 1. I_{FL} = Full Load Current; I_{LR} = Locked Rotor Current; T_{FL} = Full Load Torque, T_{LR} = Locked Rotor Torque; T_M = Maximum or Breakdown Torque.
2. The data above is based on 440V design, 460V and 480V data are the reference values.
3. Tolerance according to IEC60034-1; Current tolerance: ±3%
4. All technical details are subject to change without prior notice.

JWP(IIB)/JWC(IIC) (SLEx IE2) PERFORMANCE DATA AT 60HZ

Synchronous speed (2Pole/3600RPM, 4Pole/1800RPM, 6Pole/1200RPM, 8Pole/900RPM)

Rated Output		Pole	Model	Rated Speed (RPM)	Rated Current (I_{FL})			Power Factor (cosØ)	Eff (%)	I_{LR}/I_{FL}	T_{FL} (Nm)	T_{LR}/T_{FL}	T_M/T_{FL}	Moment of Inertia ($kg.m^2$)	Weight (kg)
kW	HP				440V (A)	460V (A)	480V (A)								
26.4	35	2	SLEx-180M-2	3540	43.3	41.4	39.7	0.88	91.0	8.1	71.2	2.2	2.3	0.125	180
		4	SLEx-180L-4	1760	44.6	42.7	40.9	0.84	92.4	7.8	140	2.0	2.3	0.268	200
		6	SLEx-200L2-6	1180	47.2	45.2	43.3	0.80	91.7	7.3	214	2.0	2.1	0.485	232
		8	SLEx-225M-8	875	49.4	47.3	45.3	0.77	91.0	6.6	288	1.9	2.0	0.704	290
36.0	48	2	SLEx-200L1-2	3555	58.5	56.0	53.7	0.88	91.7	7.5	97.1	2.0	2.3	0.183	225
		4	SLEx-200L-4	1770	60.5	57.8	55.4	0.84	93.0	7.3	195	2.0	2.3	0.433	270
		6	SLEx-225M-6	1180	62.7	60.0	57.5	0.81	93.0	6.8	291	2.0	2.1	0.669	280
		8	SLEx-250M-8	870	66.6	63.7	61.0	0.78	91.0	6.6	395	1.9	2.0	1.07	389
44.4	60	2	SLEx-200L2-2	3555	71.7	68.5	65.7	0.88	92.4	7.5	119	2.0	2.3	0.216	243
		4	SLEx-225S-4	1775	73.7	70.5	67.6	0.85	93.0	7.4	240	2.0	2.3	0.717	300
		6	SLEx-250M-6	1180	76.0	73.0	70.0	0.82	93.0	7.0	359	2.0	2.1	1.17	365
		8	SLEx-280S-8	885	81.5	77.9	74.7	0.78	91.7	6.6	478	1.9	2.0	1.85	550
54.0	72	2	SLEx-225M-2	3555	86.6	82.8	79.4	0.88	93.0	7.5	145	2.2	2.3	0.300	300
		4	SLEx-225M-4	1775	89.0	85.0	82.0	0.85	93.6	7.4	291	2.0	2.3	0.847	320
		6	SLEx-280S-6	1185	90.0	86.0	83.0	0.84	93.6	7.2	434	2.0	2.0	1.89	478
		8	SLEx-280M-8	885	99.1	94.8	90.8	0.78	91.7	6.6	581	1.9	2.0	2.15	650
66.0	88	2	SLEx-250M-2	3570	106	101	97.0	0.88	93.0	7.6	177	2.2	2.3	0.435	372
		4	SLEx-250M-4	1780	108	104	99.0	0.85	94.1	7.4	355	2.2	2.3	1.06	430
		6	SLEx-280M-6	1185	109	104	100	0.85	93.6	7.2	533	2.0	2.0	2.28	553
		8	SLEx-315S-8	880	116	111	107	0.80	93.0	6.6	715	1.8	2.0	4.28	930
90.0	120	2	SLEx-280S-2	3570	143	137	131	0.88	93.6	6.9	241	1.8	2.3	0.766	520
		4	SLEx-280S-4	1785	145	139	133	0.86	94.5	6.9	484	2.0	2.3	2.01	580
		6	SLEx-315S-6	1185	151	145	139	0.83	94.1	6.5	723	2.0	2.0	4.11	860
		8	SLEx-315M-8	880	159	152	146	0.80	93.0	6.6	974	1.8	2.0	5.70	1040
108	144	2	SLEx-280M-2	3570	170	163	156	0.88	94.5	6.9	289	1.8	2.3	0.896	560
		4	SLEx-280M-4	1785	172	165	158	0.87	94.5	6.9	579	2.0	2.3	2.25	650
		6	SLEx-315M-6	1185	179	171	164	0.84	94.1	6.6	868	2.0	2.0	4.65	950
		8	SLEx-315L1-8	880	187	179	171	0.81	93.6	6.6	1169	1.8	2.0	6.77	1060
132	176	2	SLEx-315S-2	3580	206	197	189	0.89	94.5	7.0	353	1.8	2.2	1.71	940
		4	SLEx-315S-4	1785	207	198	190	0.88	95.0	7.0	707	2.0	2.2	3.24	940
		6	SLEx-315L1-6	1185	217	208	199	0.84	95.0	6.6	1061	2.0	2.0	5.79	1120
		8	SLEx-315L2-8	885	228	219	209	0.81	93.6	6.4	1420	1.8	2.0	8.02	1070
158	211	2	SLEx-315M-2	3580	247	236	227	0.89	94.5	7.0	423	1.8	2.2	1.87	990
		4	SLEx-315M-4	1785	249	238	228	0.88	95.0	7.0	849	2.0	2.2	3.64	1030
		6	SLEx-315L2-6	1185	257	246	236	0.85	95.0	6.6	1273	2.0	2.0	7.01	1180
		8	SLEx-355S-8	885	274	262	251	0.81	93.6	6.4	1704	1.8	2.0	12.4	1530
192	256	2	SLEx-315L1-2	3580	295	282	270	0.90	95.0	8.1	513	1.8	2.2	2.15	1050
		4	SLEx-315L1-4	1785	298	285	273	0.89	95.0	6.9	102	2.0	2.2	4.57	1150
		6	SLEx-355S-6	1185	312	298	286	0.85	95.0	6.7	1543	2.0	2.0	10.9	1650
		8	SLEx-355M-8	885	332	318	305	0.81	93.6	6.4	2065	1.8	2.0	15.1	1570
240	320	2	SLEx-315L2-2	3580	367	351	336	0.90	95.4	8.1	641	1.8	2.2	2.46	1140
		4	SLEx-315L2-4	1785	372	356	341	0.89	95.0	7.1	1286	2.0	2.2	5.44	1200
		6	SLEx-355M2-6	1190	390	373	358	0.85	95.0	6.8	1929	2.0	2.0	14.1	1800
		8	SLEx-355L2-8	885	410	392	376	0.82	93.6	6.4	2581	1.8	2.0	18.3	1820
264	352	2	SLEx-355M1-2	3580	403	386	370	0.90	95.4	8.1	705	1.6	2.2	3.61	1630
		4	SLEx-355L2-4	1785	410	392	376	0.89	95.0	7.1	1415	2.0	2.2	7.79	1660
		6	SLEx-355L1-6	1190	429	410	393	0.85	95.0	6.8	2122	2.0	2.0	14.8	1860
300	400	2	SLEx-355M2-2	3580	458	439	420	0.90	95.4	7.1	801	1.6	2.2	3.96	1650
		4	SLEx-355M2-4	1790	464	443	425	0.89	95.4	7.1	1602	2.0	2.2	8.29	1750
		6	SLEx-355L2-6	1190	488	466	447	0.85	95.0	6.8	2412	2.0	2.0	15.0	1900
336	448	2	SLEx-355L1-2	3580	514	491	471	0.90	95.4	7.2	897	1.6	2.2	4.36	1720
		4	SLEx-355L1-4	1790	519	497	476	0.89	95.4	7.1	1795	2.0	2.2	9.27	1830
378	504	2	SLEx-355L2-2	3580	578	553	530	0.90	95.4	7.2	1009	1.6	2.2	4.40	1800
		4	SLEx-355M1-4	1790	584	559	536	0.89	95.4	7.1	2019	2.0	2.2	10.3	2000

Note:
1. I_{FL} = Full Load Current; I_{LR} = Locked Rotor Current; T_{FL} = Full Load Torque, T_{LR} = Locked Rotor Torque; T_M = Maximum or Breakdown Torque.
2. The data above is based on 440V design, 460V and 480V data are the reference values.
3. Tolerance according to IEC60034-1; Current tolerance: ±3%
4. All technical details are subject to change without prior notice.

JPP(IIB)/JPC(IIC) (SLEx IE3) PERFORMANCE DATA AT 50HZ

Synchronous speed (2Pole/3000RPM, 4Pole/1500RPM, 6Pole/1000RPM, 8Pole/750RPM)

Rated Output		Pole	Model	Rated Speed (RPM)	Rated Current (I_{FL})			Power Factor (cosØ)	Eff (%)	I_{LR}/I_{FL}	T_{FL} (Nm)	T_{LR}/T_{FL}	T_M/T_{FL}	Moment of Inertia ($kg.m^2$)	Weight (kg)
kW	HP				380V (A)	400V (A)	415V (A)								
0.18	0.25	8	SLEx-80M1-8	665	0.76	0.73	0.70	0.61	58.7	3.3	2.6	1.8	1.9	0.0021	33
0.25	0.34	8	SLEx-80M2-8	665	0.97	0.92	0.89	0.61	64.1	3.3	3.7	1.8	2.0	0.0028	34
0.37	0.5	6	SLEx-80M1-6	925	1.09	1.04	1.00	0.70	73.5	6.0	3.8	2.0	2.1	0.0036	26
		8	SLEx-90S-8	700	1.33	1.26	1.22	0.61	69.3	4.0	5.4	1.8	2.0	0.0055	33
0.55	0.75	4	SLEx-80M1-4	1410	1.38	1.31	1.26	0.75	80.8	6.1	3.7	2.3	2.3	0.0028	25
		6	SLEx-80M2-6	925	1.50	1.43	1.37	0.72	77.2	6.0	5.6	2.0	2.1	0.0042	28
		8	SLEx-90L-8	700	1.88	1.78	1.72	0.61	73.0	4.0	8.0	1.8	2.0	0.0066	36
0.75	1.0	2	SLEx-80M1-2	2870	1.72	1.64	1.57	0.82	80.7	7.0	2.4	2.3	2.3	0.0010	26
		4	SLEx-80M2-4	1410	1.84	1.75	1.68	0.75	82.5	6.6	5.0	2.3	2.3	0.0030	27
		6	SLEx-90S-6	930	2.03	1.93	1.86	0.71	78.9	6.0	7.5	2.0	2.1	0.0055	32
		8	SLEx-100L1-8	700	2.27	2.15	2.08	0.67	75.0	4.0	10.2	1.8	2.0	0.0085	42
1.1	1.5	2	SLEx-80M2-2	2870	2.43	2.31	2.23	0.83	82.7	7.3	3.6	2.2	2.3	0.0016	28
		4	SLEx-90S-4	1425	2.61	2.48	2.39	0.76	84.1	6.8	7.4	2.3	2.3	0.0040	32
		6	SLEx-90L-6	930	2.83	2.69	2.59	0.73	81.0	6.0	11.1	2.0	2.1	0.0077	35
		8	SLEx-100L2-8	700	3.12	2.96	2.86	0.69	77.7	5.0	15.2	1.8	2.0	0.0111	42
1.5	2.0	2	SLEx-90S-2	2885	3.22	3.06	2.95	0.84	84.2	7.6	5.0	2.2	2.3	0.0023	33
		4	SLEx-90L-4	1425	3.47	3.30	3.18	0.77	85.3	7.0	10.0	2.3	2.3	0.0052	36
		6	SLEx-100L-6	945	3.78	3.59	3.46	0.73	82.5	6.5	15.0	2.0	2.1	0.0137	42
		8	SLEx-112M-8	705	4.14	3.94	3.79	0.69	79.7	6.0	20.5	1.8	2.0	0.0159	68
2.2	3.0	2	SLEx-90L-2	2885	4.58	4.35	4.19	0.85	85.9	7.6	7.3	2.2	2.3	0.0031	36
		4	SLEx-100L1-4	1440	4.76	4.52	4.36	0.81	86.7	7.6	14.5	2.3	2.3	0.0098	44
		6	SLEx-112M-6	945	5.36	5.09	4.91	0.74	84.3	6.6	21.9	2.0	2.1	0.0208	69
		8	SLEx-132S-8	705	5.75	5.46	5.27	0.71	81.9	6.0	29.6	1.8	2.0	0.0333	88
3	4.0	2	SLEx-100L-2	2880	6.02	5.71	5.51	0.87	87.1	7.8	9.9	2.2	2.3	0.0051	46
		4	SLEx-100L2-4	1440	6.34	6.02	5.81	0.82	87.7	7.6	19.8	2.3	2.3	0.0131	48
		6	SLEx-132S-6	965	7.20	6.84	6.59	0.74	85.6	6.8	29.7	2.0	2.1	0.0369	88
		8	SLEx-132M-8	705	7.48	7.10	6.85	0.73	83.5	6.0	40.4	1.8	2.0	0.0462	97
4	5.5	2	SLEx-112M-2	2890	7.84	7.45	7.18	0.88	88.1	8.3	13.1	2.2	2.3	0.0082	69
		4	SLEx-112M-4	1445	8.37	7.95	7.66	0.82	88.6	7.8	26.3	2.2	2.3	0.0192	73
		6	SLEx-132M1-6	965	9.46	8.99	8.70	0.74	86.8	6.8	39.6	2.0	2.1	0.0518	97
		8	SLEx-160M1-8	710	9.82	9.33	8.99	0.73	84.8	6.0	52.3	1.9	2.0	0.0687	131
5.5	7.5	2	SLEx-132S1-2	2910	10.6	10.1	9.71	0.88	89.2	8.3	18.0	2.0	2.3	0.0160	92
		4	SLEx-132S-4	1455	11.2	10.7	10.3	0.83	89.6	7.9	36.0	2.0	2.3	0.0383	92
		6	SLEx-132M2-6	965	12.7	12.0	11.6	0.75	88.0	7.0	54.1	2.0	2.1	0.0684	105
		8	SLEx-160M2-8	710	13.1	12.4	12.0	0.74	86.2	6.0	72.4	2.0	2.0	0.0971	142
7.5	10	2	SLEx-132S2-2	2910	14.4	13.7	13.2	0.88	90.1	7.9	24.4	2.0	2.3	0.020	96
		4	SLEx-132M-4	1455	15.0	14.3	13.7	0.84	90.4	7.5	49.1	2.0	2.3	0.049	104
		6	SLEx-160M-6	965	16.2	15.4	14.8	0.79	89.1	7.0	73.5	2.0	2.1	0.125	144
		8	SLEx-160L-8	710	17.4	16.5	15.9	0.75	87.3	6.0	99.5	2.0	2.0	0.138	166
11	15	2	SLEx-160M1-2	2935	20.6	19.6	18.9	0.89	91.2	8.1	35.7	2.0	2.3	0.057	145
		4	SLEx-160M-4	1465	21.5	20.4	19.7	0.85	91.4	7.7	71.7	2.2	2.3	0.126	159
		6	SLEx-160L-6	965	23.1	22.0	21.2	0.80	90.3	7.2	108	2.0	2.1	0.166	169
		8	SLEx-180L-8	720	24.8	23.6	22.7	0.76	88.6	6.6	145	2.0	2.0	0.231	213
15	20	2	SLEx-160M2-2	2935	27.9	26.5	25.6	0.89	91.9	8.1	48.7	2.0	2.3	0.072	154
		4	SLEx-160L-4	1465	28.8	27.3	26.4	0.86	92.1	7.8	97.8	2.2	2.3	0.155	181
		6	SLEx-180L-6	975	30.9	29.3	28.3	0.81	91.2	7.3	146	2.0	2.1	0.286	215
		8	SLEx-200L-8	725	33.5	31.8	30.7	0.76	89.6	6.6	196	2.0	2.0	0.388	281
18.5	25	2	SLEx-160L-2	2935	34.2	32.5	31.3	0.89	92.4	8.2	60.0	2.0	2.3	0.084	173
		4	SLEx-180M-4	1470	35.3	33.5	32.3	0.86	92.6	7.8	120	2.0	2.3	0.224	212
		6	SLEx-200L1-6	975	37.8	35.9	34.6	0.81	91.7	7.3	179	2.0	2.1	0.421	273
		8	SLEx-225S-8	735	41.0	39.0	37.5	0.76	90.1	6.6	242	1.9	2.0	0.599	347

Note: 1. I_{FL} = Full Load Current; I_{LR} = Locked Rotor Current; T_{FL} = Full Load Torque, T_{LR} = Locked Rotor Torque; T_M = Maximum or Breakdown Torque.
2. The data above is based on 400V design, 380V and 415V data are the reference values.
3. Tolerance according to IEC60034-1; Current tolerance: ±3%
4. All technical details are subject to change without prior notice.

JPP(IIB)/JPC(IIC) (SLEx IE3) PERFORMANCE DATA AT 50HZ

Synchronous speed (2Pole/3000RPM, 4Pole/1500RPM, 6Pole/1000RPM, 8Pole/750RPM)

Rated Output		Pole	Model	Rated Speed (RPM)	Rated Current (I_{FL})			Power Factor (cosØ)	Eff (%)	I_{LR}/I_{FL}	T_{FL} (Nm)	T_{LR}/T_{FL}	T_M/T_{FL}	Moment of Inertia ($kg.m^2$)	Weight (kg)
kW	HP				380V (A)	400V (A)	415V (A)								
22	30	2	SLEx-180M-2	2950	40.5	38.5	37.1	0.89	92.7	8.2	71.1	2.0	2.3	0.125	198
		4	SLEx-180L-4	1470	41.8	39.7	38.3	0.86	93.0	7.8	143	2.0	2.3	0.268	225
		6	SLEx-200L2-6	975	44.8	42.5	41.0	0.81	92.2	7.4	213	2.0	2.1	0.485	282
		8	SLEx-225M-8	735	47.3	44.9	43.3	0.78	90.6	6.6	288	1.9	2.0	0.704	374
30	40	2	SLEx-200L1-2	2955	54.9	52.1	50.3	0.89	93.3	7.6	96.6	2.0	2.3	0.183	281
		4	SLEx-200L-4	1470	56.6	53.8	51.8	0.86	93.6	7.3	194	2.0	2.3	0.433	292
		6	SLEx-225M-6	980	59.1	56.2	54.1	0.83	92.9	6.9	291	2.0	2.1	0.669	372
		8	SLEx-250M-8	730	63.2	60.0	57.9	0.79	91.3	6.6	392	1.9	2.0	1.07	461
37	50	2	SLEx-200L2-2	2955	67.4	64.0	61.7	0.89	93.7	7.6	119	2.0	2.3	0.216	297
		4	SLEx-225S-4	1480	69.6	66.1	63.7	0.86	93.9	7.4	239	2.0	2.3	0.717	360
		6	SLEx-250M-6	980	71.7	68.1	65.7	0.84	93.3	7.1	359	2.0	2.1	1.17	456
		8	SLEx-280S-8	735	77.5	73.6	71.0	0.79	91.8	6.6	481	1.9	2.0	1.85	586
45	60	2	SLEx-225M-2	2960	80.8	76.8	74.0	0.90	94.0	7.7	145	2.0	2.3	0.300	378
		4	SLEx-225M-4	1480	84.4	80.2	77.3	0.86	94.2	7.4	290	2.0	2.3	0.847	393
		6	SLEx-280S-6	985	85.8	81.6	78.6	0.85	93.7	7.3	434	2.0	2.0	1.89	580
		8	SLEx-280M-8	735	93.9	89.2	86.0	0.79	92.2	6.6	585	1.9	2.0	2.15	643
55	75	2	SLEx-250M-2	2965	98.5	93.5	90.2	0.90	94.3	7.7	177	2.0	2.3	0.435	469
		4	SLEx-250M-4	1480	103	97.6	94.3	0.86	94.6	7.4	355	2.2	2.3	1.06	483
		6	SLEx-280M-6	985	103	98.1	94.3	0.86	94.1	7.3	531	2.0	2.0	2.28	628
		8	SLEx-315S-8	735	112	106	103	0.81	92.5	6.6	710	1.8	2.0	4.28	970
75	100	2	SLEx-280S-2	2975	134	127	123	0.90	94.7	7.1	240	1.8	2.3	0.766	588
		4	SLEx-280S-4	1475	136	129	125	0.88	95.0	6.9	482	2.0	2.3	2.01	625
		6	SLEx-315S-6	985	143	136	131	0.84	94.6	6.6	723	2.0	2.0	4.11	990
		8	SLEx-315M-8	735	151	144	138	0.81	93.1	6.6	968	1.8	2.0	5.70	1130
90	125	2	SLEx-280M-2	2975	160	152	147	0.90	95.0	7.1	288	1.8	2.3	0.896	628
		4	SLEx-280M-4	1475	163	155	149	0.88	95.2	6.9	579	2.0	2.3	2.25	692
		6	SLEx-315M-6	985	170	161	156	0.85	94.9	6.7	868	2.0	2.0	4.65	1100
		8	SLEx-315L1-8	735	179	170	164	0.82	93.4	6.6	1161	1.8	2.0	6.77	1220
110	150	2	SLEx-315S-2	2970	195	185	179	0.90	95.2	7.1	353	1.8	2.3	1.71	1020
		4	SLEx-315S-4	1480	197	187	180	0.89	95.4	7.0	707	2.0	2.2	3.24	1060
		6	SLEx-315L1-6	985	207	196	190	0.85	95.1	6.7	1061	2.0	2.0	5.79	1205
		8	SLEx-315L2-8	735	218	207	200	0.82	93.7	6.4	1420	1.8	2.0	8.02	1310
132	180	2	SLEx-315M-2	2970	234	222	214	0.90	95.4	7.1	422	1.8	2.3	1.87	1100
		4	SLEx-315M-4	1480	236	224	216	0.89	95.6	7.0	849	2.0	2.2	3.64	1210
		6	SLEx-315L2-6	985	244	232	223	0.86	95.4	6.8	1273	2.0	2.0	7.01	1270
		8	SLEx-355S-8	740	260	247	238	0.82	94.0	6.4	1704	1.8	2.0	12.4	1750
160	215	2	SLEx-315L1-2	2970	279	265	255	0.91	95.6	7.2	513	1.8	2.3	2.15	1160
		4	SLEx-315L1-4	1480	285	271	261	0.89	95.8	7.1	1026	2.0	2.2	4.57	1230
		6	SLEx-355S-6	985	296	281	271	0.86	95.6	6.8	1543	1.8	2.0	10.9	1640
		8	SLEx-355M-8	740	314	299	288	0.82	94.3	6.4	2065	1.8	2.0	15.1	1960
200	270	2	SLEx-315L2-2	2970	349	331	320	0.91	95.8	7.2	640	1.8	2.2	2.46	1220
		4	SLEx-315L2-4	1480	352	334	322	0.90	96.0	7.1	1286	2.0	2.2	5.44	1320
		6	SLEx-355M2-6	985	365	346	334	0.87	95.8	6.8	1929	1.8	2.0	14.1	1750
		8	SLEx-355L2-8	740	387	368	354	0.83	94.6	6.4	2581	1.8	2.0	18.3	2065
220	295	2	SLEx-355M1-2	2970	383	364	351	0.91	95.8	7.2	704	1.8	2.2	3.61	1780
		4	SLEx-355L2-4	1485	387	368	354	0.90	96.0	7.1	1410	2.0	2.2	7.79	1630
		6	SLEx-355L1-6	985	401	381	367	0.87	95.8	6.8	2112	1.8	2.0	14.8	1860
250	340	2	SLEx-355M2-2	2970	436	414	399	0.91	95.8	7.2	800	1.6	2.2	3.96	1830
		4	SLEx-355M2-4	1485	440	418	403	0.90	96.0	7.1	1597	2.0	2.2	8.29	1770
		6	SLEx-355L2-6	985	456	433	418	0.87	95.8	6.8	2412	1.8	2.0	15.0	1910
280	380	2	SLEx-355L1-2	2970	488	464	447	0.91	95.8	7.2	896	1.6	2.2	4.36	2070
		4	SLEx-355L1-4	1485	492	468	451	0.90	96.0	7.1	1789	2.0	2.2	9.27	1820
315	425	2	SLEx-355L2-2	2970	549	522	503	0.91	95.8	7.2	1008	1.6	2.2	4.40	2150
		4	SLEx-355M1-4	1485	554	526	507	0.90	96.0	7.1	2012	2.0	2.2	10.3	1860

Note: 1. I_{FL} = Full Load Current; I_{LR} = Locked Rotor Current; T_{FL} = Full Load Torque, T_{LR} = Locked Rotor Torque; T_M = Maximum or Breakdown Torque.
2. The data above is based on 400V design, 380V and 415V data are the reference values.
3. Tolerance according to IEC60034-1; Current tolerance: ±3%
4. All technical details are subject to change without prior notice.

JPP(IIB)/JPC(IIC) (SLEx IE3) PERFORMANCE DATA AT 60HZ

Synchronous speed (2Pole/3600RPM, 4Pole/1800RPM, 6Pole/1200RPM, 8Pole/900RPM)

Rated Output		Pole	Model	Rated Speed (RPM)	Rated Current (I_{FL})			Power Factor (cosØ)	Eff (%)	I_{LR}/I_{FL}	T_{FL} (Nm)	T_{LR}/T_{FL}	T_M/T_{FL}	Moment of Inertia ($kg.m^2$)	Weight (kg)
kW	HP				440V (A)	460V (A)	480V (A)								
0.22	0.3	8	SLEx-80M1-8	798	0.74	0.71	0.68	0.60	64.0	3.3	2.64	1.8	1.9	0.0021	33
0.30	0.4	8	SLEx-80M2-8	798	0.96	0.92	0.88	0.60	68.0	3.3	3.67	1.8	2.0	0.0028	34
0.44	0.6	6	SLEx-80M1-6	1110	1.12	1.07	1.03	0.69	75.3	6.0	3.78	2.0	2.1	0.0036	26
		8	SLEx-90S-8	840	1.35	1.29	1.24	0.60	72.0	4.0	5.35	1.8	2.0	0.0055	33
0.66	0.9	4	SLEx-80M1-4	1692	1.44	1.38	1.32	0.74	81.1	6.1	3.67	2.3	2.3	0.0028	25
		6	SLEx-80M2-6	1110	1.49	1.43	1.37	0.71	81.7	6.0	5.59	2.0	2.1	0.0042	28
		8	SLEx-90L-8	840	1.95	1.87	1.79	0.60	74.0	4.0	7.96	1.8	2.0	0.0066	36
0.90	1.2	2	SLEx-80M1-2	3444	1.89	1.81	1.74	0.81	77.0	7.0	2.40	2.3	2.3	0.0010	26
		4	SLEx-80M2-4	1692	1.91	1.83	1.75	0.74	83.5	6.6	5.01	2.3	2.3	0.0030	27
		6	SLEx-90S-6	1116	2.04	1.96	1.87	0.70	82.5	6.0	7.54	2.0	2.1	0.0055	32
		8	SLEx-100L1-8	840	2.37	2.27	2.17	0.66	75.5	4.0	10.2	1.8	2.0	0.0085	42
1.32	1.8	2	SLEx-80M2-2	3444	2.51	2.41	2.31	0.82	84.0	7.3	3.63	2.2	2.3	0.0016	28
		4	SLEx-90S-4	1710	2.67	2.55	2.45	0.75	86.5	6.8	7.35	2.3	2.3	0.0040	32
		6	SLEx-90L-6	1116	2.75	2.63	2.52	0.72	87.5	6.0	11.1	2.0	2.1	0.0077	35
		8	SLEx-100L2-8	840	3.24	3.10	2.97	0.68	78.5	5.0	15.2	1.8	2.0	0.0111	42
1.80	2.4	2	SLEx-90S-2	3462	3.33	3.18	3.05	0.83	85.5	7.6	4.95	2.2	2.3	0.0023	33
		4	SLEx-90L-4	1710	3.59	3.44	3.29	0.76	86.5	7.0	9.98	2.3	2.3	0.0052	36
		6	SLEx-100L-6	1134	3.71	3.55	3.40	0.72	88.5	6.5	15.0	2.0	2.1	0.0137	42
		8	SLEx-112M-8	846	4.14	3.96	3.79	0.68	84.0	6.0	20.5	1.8	2.0	0.0159	68
2.64	3.5	2	SLEx-90L-2	3462	4.77	4.56	4.37	0.84	86.5	7.6	7.26	2.2	2.3	0.0031	36
		4	SLEx-100L1-4	1728	4.84	4.63	4.44	0.80	89.5	7.6	14.5	2.3	2.3	0.0098	44
		6	SLEx-112M-6	1134	5.30	5.07	4.86	0.73	89.5	6.6	21.9	2.0	2.1	0.0208	69
		8	SLEx-132S-8	846	5.79	5.54	5.31	0.70	85.5	6.0	29.6	1.8	2.0	0.0333	88
3.60	4.8	2	SLEx-100L-2	3456	6.35	6.07	5.82	0.86	86.5	7.8	9.90	2.2	2.3	0.0051	46
		4	SLEx-100L2-4	1728	6.52	6.23	5.97	0.81	89.5	7.6	19.8	2.3	2.3	0.0131	48
		6	SLEx-132S-6	1158	7.23	6.92	6.63	0.73	89.5	6.8	29.7	2.0	2.1	0.0369	88
		8	SLEx-132M-8	846	7.67	7.34	7.03	0.72	85.5	6.0	40.4	1.8	2.0	0.0462	97
4.80	6.4	2	SLEx-112M-2	3468	8.18	7.82	7.50	0.87	88.5	8.3	13.1	2.2	2.3	0.0082	69
		4	SLEx-112M-4	1734	8.69	8.31	7.96	0.81	89.5	7.8	26.3	2.2	2.3	0.019	73
		6	SLEx-132M1-6	1158	9.40	8.90	8.60	0.74	91.0	6.8	39.6	2.0	2.1	0.052	97
		8	SLEx-160M1-8	852	10.1	9.67	9.27	0.72	86.5	6.0	52.3	1.9	2.0	0.069	131
6.60	8.8	2	SLEx-132S1-2	3492	11.3	10.8	10.3	0.87	88.5	8.3	18.0	2.0	2.3	0.016	92
		4	SLEx-132S-4	1746	11.5	11.0	10.6	0.82	91.7	7.9	36.0	2.0	2.3	0.038	92
		6	SLEx-132M2-6	1158	12.2	11.7	11.2	0.78	91.0	7.0	54.1	2.0	2.1	0.068	105
		8	SLEx-160M2-8	852	13.7	13.1	12.6	0.73	86.5	6.0	72.4	2.0	2.0	0.097	142
9.00	12	2	SLEx-132S2-2	3492	15.0	14.3	13.7	0.88	89.5	7.9	24.4	2.0	2.3	0.020	96
		4	SLEx-132M-4	1746	15.5	14.8	14.2	0.83	91.7	7.5	49.1	2.0	2.3	0.049	104
		6	SLEx-160M-6	1158	16.3	15.6	14.9	0.79	91.7	7.0	73.5	2.0	2.1	0.125	144
		8	SLEx-160L-8	852	17.8	17.1	16.3	0.74	89.5	6.0	99.5	2.0	2.0	0.138	166
13.2	18	2	SLEx-160M1-2	3522	21.8	20.9	20.0	0.88	90.2	8.1	35.7	2.0	2.3	0.057	145
		4	SLEx-160M-4	1758	22.3	21.3	20.5	0.84	92.4	7.7	71.7	2.2	2.3	0.126	159
		6	SLEx-160L-6	1158	23.6	22.6	21.6	0.80	91.7	7.2	108	2.0	2.1	0.166	169
		8	SLEx-180L-8	864	25.8	24.7	23.7	0.75	89.5	6.6	145	2.0	2.0	0.231	213
18.0	24	2	SLEx-160M2-2	3522	29.5	28.2	27.0	0.88	91.0	8.1	48.7	2.0	2.3	0.072	154
		4	SLEx-160L-4	1758	29.9	28.6	27.4	0.85	93.0	7.8	97.8	2.2	2.3	0.155	181
		6	SLEx-180L-6	1170	31.7	30.4	29.1	0.80	93.0	7.3	146	2.0	2.1	0.286	215
		8	SLEx-200L-8	870	34.9	33.4	32.0	0.75	90.2	6.6	196	2.0	2.0	0.388	281
22.2	30	2	SLEx-160L-2	3522	36.4	34.8	33.3	0.88	91.0	8.2	60.0	2.0	2.3	0.084	173
		4	SLEx-180M-4	1764	36.6	35.0	33.6	0.85	93.6	7.8	120	2.0	2.3	0.224	212
		6	SLEx-200L1-6	1170	39.2	37.5	35.9	0.80	93.0	7.3	179	2.0	2.1	0.421	273
		8	SLEx-225S-8	882	43.1	41.2	39.5	0.75	90.2	6.6	242	1.9	2.0	0.599	347

Note: 1. I_{FL} = Full Load Current; I_{LR} = Locked Rotor Current; T_{FL} = Full Load Torque, T_{LR} = Locked Rotor Torque; T_M = Maximum or Breakdown Torque.
2. The data above is based on 440V design, 460V and 480V data are the reference values.
3. Tolerance according to IEC60034-1; Current tolerance: ±3%
4. All technical details are subject to change without prior notice.

JPP(IIB)/JPC(IIC) (SLEx IE3) PERFORMANCE DATA AT 60HZ

Synchronous speed (2Pole/3600RPM, 4Pole/1800RPM, 6Pole/1200RPM, 8Pole/900RPM)

Rated Output		Pole	Model	Rated Speed (RPM)	Rated Current (I_{FL})			Power Factor (cosØ)	Eff (%)	I_{LR}/I_{FL}	T_{FL} (Nm)	T_{LR}/T_{FL}	T_M/T_{FL}	Moment of Inertia ($kg.m^2$)	Weight (kg)
kW	HP				440V (A)	460V (A)	480V (A)								
26.4	35	2	SLEx-180M-2	3540	42.9	41.1	39.4	0.88	91.7	8.2	71.1	2.0	2.3	0.125	198
		4	SLEx-180L-4	1764	43.5	41.6	39.9	0.85	93.6	7.8	143	2.0	2.3	0.268	225
		6	SLEx-200L2-6	1170	44.9	42.9	41.2	0.82	94.1	7.4	213	2.0	2.1	0.485	282
		8	SLEx-225M-8	882	49.1	46.9	45.0	0.77	91.7	6.6	288	1.9	2.0	0.704	374
36.0	48	2	SLEx-200L1-2	3546	58.5	56.0	53.7	0.88	91.7	7.6	96.6	2.0	2.3	0.183	281
		4	SLEx-200L-4	1764	59.1	56.5	54.1	0.85	94.1	7.3	194	2.0	2.3	0.433	292
		6	SLEx-225M-6	1176	60.5	57.9	55.4	0.83	94.1	6.9	291	2.0	2.1	0.669	372
		8	SLEx-250M-8	876	66.0	63.2	60.5	0.78	91.7	6.6	392	1.9	2.0	1.07	461
44.4	60	2	SLEx-200L2-2	3546	71.7	68.5	65.7	0.88	92.4	7.6	119	2.0	2.3	0.216	297
		4	SLEx-225S-4	1776	72.5	69.4	66.5	0.85	94.5	7.4	239	2.0	2.3	0.717	360
		6	SLEx-250M-6	1176	73.4	70.2	67.3	0.84	94.5	7.1	359	2.0	2.1	1.17	456
		8	SLEx-280S-8	882	80.8	77.3	74.1	0.78	92.4	6.6	481	1.9	2.0	1.85	586
54.0	72	2	SLEx-225M-2	3552	85.6	81.9	78.5	0.89	93.0	7.7	145	2.0	2.3	0.300	378
		4	SLEx-225M-4	1776	87.8	83.9	80.4	0.85	95.0	7.4	290	2.0	2.3	0.847	393
		6	SLEx-280S-6	1182	88.2	84.4	80.9	0.85	94.5	7.3	434	2.0	2.0	1.89	580
		8	SLEx-280M-8	882	98.3	94.0	90.1	0.78	92.4	6.6	585	1.9	2.0	2.15	643
66.0	88	2	SLEx-250M-2	3558	104	99.4	95.3	0.89	93.6	7.7	177	2.0	2.3	0.435	469
		4	SLEx-250M-4	1776	107	102	97.9	0.85	95.4	7.4	355	2.2	2.3	1.06	483
		6	SLEx-280M-6	1182	110	105	101	0.83	95.0	7.3	531	2.0	2.0	2.28	628
		8	SLEx-315S-8	882	116	111	106	0.80	93.6	6.6	710	1.8	2.0	4.28	970
90.0	120	2	SLEx-280S-2	3570	141	135	129	0.89	94.1	7.1	240	1.8	2.3	0.766	588
		4	SLEx-280S-4	1770	142	136	130	0.87	95.4	6.9	482	2.0	2.3	2.01	625
		6	SLEx-315S-6	1182	148	142	136	0.84	95.0	6.6	723	2.0	2.0	4.11	990
		8	SLEx-315M-8	882	158	151	145	0.80	93.6	6.6	968	1.8	2.0	5.70	1130
108	144	2	SLEx-280M-2	3570	168	160	154	0.89	95.0	7.1	288	1.8	2.3	0.896	628
		4	SLEx-280M-4	1770	171	163	157	0.87	95.4	6.9	579	2.0	2.3	2.25	692
		6	SLEx-315M-6	1182	176	168	161	0.84	95.8	6.7	868	2.0	2.0	4.65	1100
		8	SLEx-315L1-8	882	186	178	170	0.81	94.1	6.6	1161	1.8	2.0	6.77	1220
132	176	2	SLEx-315S-2	3564	205	196	188	0.89	95.0	7.1	353	1.8	2.3	1.71	1020
		4	SLEx-315S-4	1776	205	197	188	0.88	95.8	7.0	707	2.0	2.2	3.24	1060
		6	SLEx-315L1-6	1182	213	203	195	0.85	95.8	6.7	1061	2.0	2.0	5.79	1205
		8	SLEx-315L2-8	882	227	217	208	0.81	94.1	6.4	1420	1.8	2.0	8.02	1310
158	211	2	SLEx-315M-2	3564	245	235	225	0.89	95.2	7.1	422	1.8	2.3	1.87	1100
		4	SLEx-315M-4	1776	246	235	226	0.88	96.0	7.0	849	2.0	2.2	3.64	1210
		6	SLEx-315L2-6	1182	255	244	234	0.85	95.8	6.8	1273	2.0	2.0	7.01	1270
		8	SLEx-355S-8	888	272	260	249	0.81	94.3	6.4	1704	1.8	2.0	12.4	1750
192	256	2	SLEx-315L1-2	3564	293	281	269	0.90	95.4	7.2	513	1.8	2.3	2.15	1160
		4	SLEx-315L1-4	1776	298	285	273	0.88	96.2	7.1	1026	2.0	2.2	4.57	1230
		6	SLEx-355S-6	1182	309	296	284	0.85	95.8	6.8	1543	1.8	2.0	10.9	1640
		8	SLEx-355M-8	888	329	314	301	0.81	94.6	6.4	2065	1.8	2.0	15.1	1960
240	320	2	SLEx-315L2-2	3564	365	349	335	0.90	95.8	7.2	640	1.8	2.2	2.46	1220
		4	SLEx-315L2-4	1776	368	352	337	0.89	96.2	7.1	1286	2.0	2.2	5.44	1320
		6	SLEx-355M2-6	1182	382	366	350	0.86	95.8	6.8	1929	1.8	2.0	14.1	1750
		8	SLEx-355L2-8	888	404	387	371	0.82	95.0	6.4	2581	1.8	2.0	18.3	2065
264	352	2	SLEx-355M1-2	3564	402	384	368	0.90	95.8	7.2	704	1.8	2.2	3.61	1780
		4	SLEx-355L2-4	1782	405	387	371	0.89	96.2	7.1	1410	2.0	2.2	7.79	1630
		6	SLEx-355L1-6	1182	420	402	385	0.86	95.8	6.8	2112	1.8	2.0	14.8	1860
300	400	2	SLEx-355M2-2	3564	457	437	419	0.90	95.8	7.2	800	1.6	2.2	3.96	1830
		4	SLEx-355M2-4	1782	460	440	421	0.89	96.2	7.1	1597	2.0	2.2	8.29	1770
		6	SLEx-355L2-6	1182	483	462	443	0.85	95.8	6.8	2412	1.8	2.0	15.0	1910
336	448	2	SLEx-355L1-2	3564	511	489	469	0.90	95.8	7.2	896	1.6	2.2	4.36	2070
		4	SLEx-355L1-4	1782	515	493	472	0.89	96.2	7.1	1789	2.0	2.2	9.27	1820
378	504	2	SLEx-355L2-2	3564	575	550	527	0.90	95.8	7.2	1008	1.6	2.2	4.40	2150
		4	SLEx-355M1-4	1782	579	554	531	0.89	96.2	7.1	2012	2.0	2.2	10.3	1860

Note: 1. I_{FL} = Full Load Current; I_{LR} = Locked Rotor Current; T_{FL} = Full Load Torque, T_{LR} = Locked Rotor Torque; T_M = Maximum or Breakdown Torque.
2. The data above is based on 440V design, 460V and 480V data are the reference values.
3. Tolerance according to IEC60034-1; Current tolerance: ±3%
4. All technical details are subject to change without prior notice.

B3 FOOT MOUNTING AND OVERALL DIMENSIONS

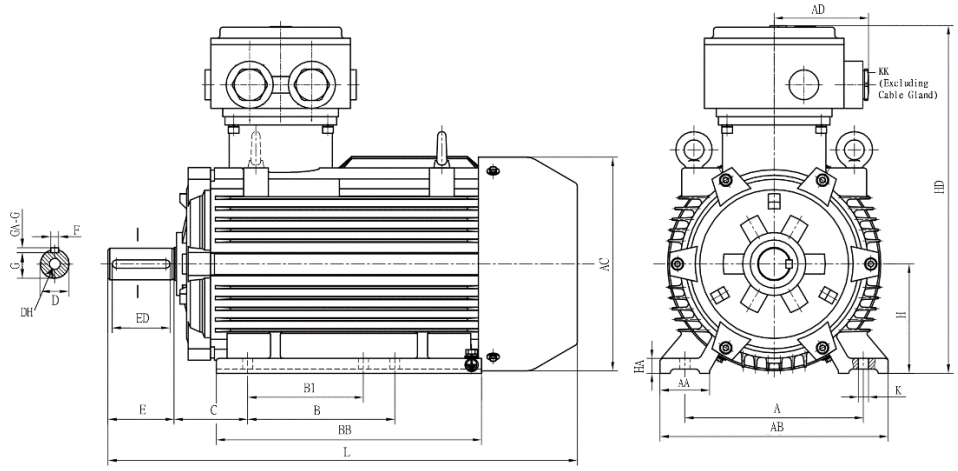

Frame Size	Pole	Mounting Dimensions						Shaft Dimensions							Overall Dimensions								
		A	B1	B	C	H	K	D	DH	E	ED	F	G	GA	AA	AB	AC	AD	BB	HA	HD	KK	L
80	2,4,6,8	125	NA	100	50	80	10	19j6	M6X16	40	28	6	15.5	21.5	34	160	160	130	160	10	310	2-M32X1.5	330
90S	2,4,6,8	140	NA	100	56	90	10	24j6	M8X19	50	40	8	20	27	36	176	175	130	170	14	335	2-M32X1.5	365
90L	2,4,6,8	140	100	125	56	90	10	24j6	M8X19	50	40	8	20	27	36	176	175	130	195	14	335	2-M32X1.5	390
100L	2,4,6,8	160	NA	140	63	100	12	28j6	M10X22	60	50	8	24	31	40	200	205	130	229	14	360	2-M32X1.5	435
112M	2,4,6,8	190	NA	140	70	112	12	28j6	M10X22	60	50	8	24	31	50	240	225	130	290	16	375	2-M32X1.5	515
132S	2,4,6,8	216	NA	140	89	132	12	38k6	M12X28	80	70	10	33	41	60	276	265	130	281	17	425	2-M32X1.5	535
132M	2,4,6,8	216	140	178	89	132	12	38k6	M12X28	80	70	10	33	41	60	276	265	130	321	17	425	2-M32X1.5	575
160M	2,4,6,8	254	NA	210	108	160	14.5	42k6	M16X36	110	90	12	37	45	75	324	320	150	358	20	510	2-M40X1.5	730
160L	2,4,6,8	254	210	254	108	160	14.5	42k6	M16X36	110	90	12	37	45	75	324	320	150	388	20	510	2-M40X1.5	760
180M	2,4,6,8	279	NA	241	121	180	14.5	48k6	M16X36	110	90	14	42.5	51.5	80	349	360	150	410	22	550	2-M40X1.5	815
180L	2,4,6,8	279	241	279	121	180	14.5	48k6	M16X36	110	90	14	42.5	51.5	80	349	360	150	430	22	550	2-M40X1.5	835
200L	2,4,6,8	318	305	305	133	200	18.5	55m6	M20X42	110	100	16	49	59	85	388	400	170	444	25	600	2-M50X1.5	875
225S	4,6,8	356	NA	286	149	225	18.5	60m6	M20X42	140	100	18	53	64	90	431	450	170	435	28	650	2-M50X1.5	930
225M	2	356	286	311	149	225	18.5	55m6	M20X42	110	100	16	49	59	90	431	450	170	465	28	650	2-M50X1.5	930
225M	4,6,8	356	286	311	149	225	18.5	60m6	M20X42	140	100	18	53	64	90	431	450	170	465	28	650	2-M50X1.5	960
250M	2	406	349	349	168	250	24	60m6	M20X42	140	125	18	53	64	95	486	500	220	480	30	710	2-M63X1.5	1005
250M	4,6,8	406	349	349	168	250	24	65m6	M20X42	140	125	18	58	69	95	486	500	220	480	30	710	2-M63X1.5	1005
280S	2	457	NA	368	190	280	24	65m6	M20X42	140	125	18	58	69	100	542	550	220	565	35	770	2-M63X1.5	1115
280S	4,6,8	457	NA	368	190	280	24	75m6	M20X42	140	125	20	67.5	79.5	100	542	550	220	565	35	770	2-M63X1.5	1115
280M	2	457	368	419	190	280	24	65m6	M20X42	140	125	18	58	69	100	542	550	220	620	35	770	2-M63X1.5	1170
280M	4,6,8	457	368	419	190	280	24	75m6	M20X42	140	125	20	67.5	79.5	100	542	550	220	620	35	770	2-M63X1.5	1170
315S	2	508	NA	406	216	315	28	65m6	M20X42	140	125	18	58	69	132	628	625	285	655	40	950	2-M75X1.5	1285
315S	4,6,8	508	NA	406	216	315	28	80m6	M20X42	170	125	22	71	85	132	628	625	285	655	40	950	2-M75X1.5	1315
315M	2	508	457	457	216	315	28	65m6	M20X42	140	125	18	58	69	132	628	625	285	775	40	950	2-M75X1.5	1405
315M	4,6,8	508	457	457	216	315	28	80m6	M20X42	170	125	22	71	85	132	628	625	285	775	40	950	2-M75X1.5	1435
315L	2	508	457	508	216	315	28	65m6	M20X42	140	125	18	58	69	132	628	625	285	775	40	950	2-M75X1.5	1405
315L	4,6,8	508	457	508	216	315	28	80m6	M20X42	170	125	22	71	85	132	628	625	285	775	40	950	2-M75X1.5	1435
355M	2	610	500	560	254	355	28	75m6	M24X50	140	125	20	67.5	79.5	140	726	715	285	840	42	1040	2-M75X1.5	1545
355M	4,6,8	610	600	560	254	355	28	95m6	M24X50	170	125	25	86	100	140	726	715	285	840	42	1040	2-M75X1.5	1545
355L	2	610	560	630	254	355	28	75m6	M24X50	140	125	20	67.5	79.5	140	726	715	285	950	42	1040	2-M75X1.5	1655
355L	4,6,8	610	560	630	254	355	28	95m6	M24X50	170	125	25	86	100	140	726	715	285	950	42	1040	2-M75X1.5	1655

All technical details are subject to change without any prior notice.
All dimensions in millimetres (mm).

B35 FOOT & FLANGE MOUNTING AND OVERALL DIMENSIONS

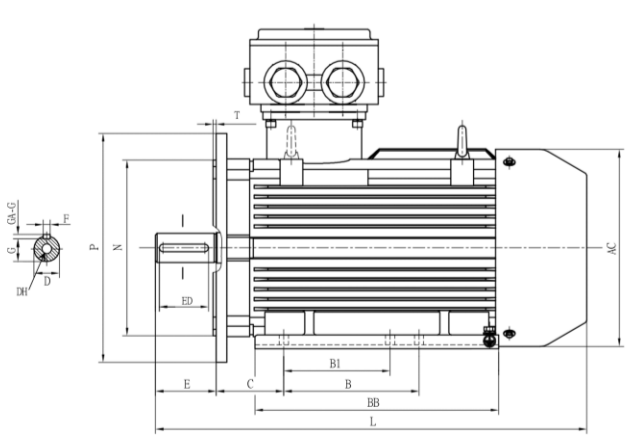

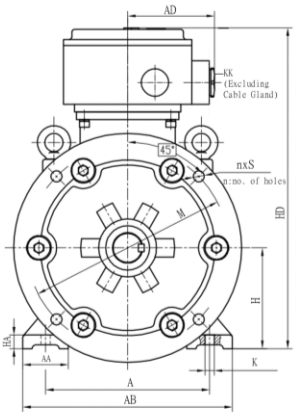

F#80 to F#200

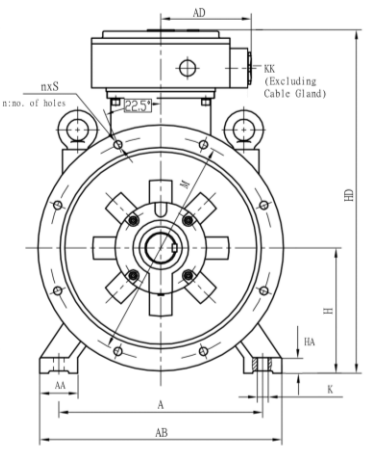

F#225 to F#355

Frame Size	Pole	Mounting Dimensions											Shaft Dimensions							Overall Dimensions								
		A	B1	B	C	H	K	M	N	P	S	T	D	DH	E	ED	F	G	GA	AA	AB	AC	AD	BB	HA	HD	KK	L
80	2,4,6,8	125	NA	100	50	80	10	165	130	200	4-ø12	3.5	19j6	M6X16	40	25	6	15.5	21.5	35	160	160	130	160	10	310	2-M32X1.5	330
90S	2,4,6,8	140	NA	100	56	90	10	165	130	200	4-ø12	3.5	24j6	M8X19	50	40	8	20	27	38	176	175	130	170	14	335	2-M32X1.5	365
90L	2,4,6,8	140	100	125	56	90	10	165	130	200	4-ø12	3.5	24j6	M8X19	50	40	8	20	27	38	176	175	130	195	14	335	2-M32X1.5	390
100L	2,4,6,8	160	NA	140	63	100	12	215	180	250	4-ø14.5	4	28j6	M10X22	60	45	8	24	31	42	200	205	130	229	14	360	2-M32X1.5	435
112M	2,4,6,8	190	NA	140	70	112	12	215	180	250	4-ø14.5	4	28j6	M10X22	60	45	8	24	31	45	240	225	130	290	16	375	2-M32X1.5	515
132S	2,4,6,8	216	NA	140	89	132	12	265	230	300	4-ø14.5	4	38k6	M12X28	80	63	10	33	41	55	276	265	130	281	17	425	2-M32X1.5	535
132M	2,4,6,8	216	140	178	89	132	12	265	230	300	4-ø14.5	4	38k6	M12X28	80	63	10	33	41	55	276	265	130	321	17	425	2-M32X1.5	575
160M	2,4,6,8	254	NA	210	108	160	14.5	300	250	350	4-ø18.5	5	42k6	M16X36	110	90	12	37	45	65	324	320	150	358	20	510	2-M40X1.5	730
160L	2,4,6,8	254	210	254	108	160	14.5	300	250	350	4-ø18.5	5	42k6	M16X36	110	90	12	37	45	65	324	320	150	388	20	510	2-M40X1.5	760
180M	2,4,6,8	279	NA	241	121	180	14.5	300	250	350	4-ø18.5	5	48k6	M16X36	110	90	14	42.5	51.5	74	349	360	150	410	22	550	2-M40X1.5	815
180L	2,4,6,8	279	241	279	121	180	14.5	300	250	350	4-ø18.5	5	48k6	M16X36	110	90	14	42.5	51.5	74	349	360	150	430	22	550	2-M40X1.5	835
200L	2,4,6,8	318	305	305	133	200	18.5	350	300	400	4-ø18.5	5	55m6	M20X42	110	90	16	49	59	75	388	400	170	444	25	600	2-M50X1.5	875
225S	4,6,8	356	NA	286	149	225	18.5	400	350	450	8-ø18.5	5	60m6	M20X42	140	110	18	53	64	80	431	450	170	435	28	650	2-M50X1.5	930
225M	2	356	286	311	149	225	18.5	400	350	450	8-ø18.5	5	55m6	M20X42	110	90	16	49	59	80	431	450	170	465	28	650	2-M50X1.5	930
225M	4,6,8	356	286	311	149	225	18.5	400	350	450	8-ø18.5	5	60m6	M20X42	140	110	18	53	64	80	431	450	170	465	28	650	2-M50X1.5	960
250M	2	406	349	349	168	250	24	500	450	550	8-ø18.5	5	60m6	M20X42	140	110	18	53	64	85	486	500	220	480	30	710	2-M63X1.5	1005
250M	4,6,8	406	349	349	168	250	24	500	450	550	8-ø18.5	5	65m6	M20X42	140	110	18	58	69	85	486	500	220	480	30	710	2-M63X1.5	1005
280S	2	457	NA	368	190	280	24	500	450	550	8-ø18.5	5	65m6	M20X42	140	110	18	58	69	90	542	550	220	565	35	770	2-M63X1.5	1115
280S	4,6,8	457	NA	368	190	280	24	500	450	550	8-ø18.5	5	75m6	M20X42	140	110	20	67.5	79.5	90	542	550	220	565	35	770	2-M63X1.5	1115
280M	2	457	368	419	190	280	24	500	450	550	8-ø18.5	5	65m6	M20X42	140	110	18	58	69	90	542	550	220	620	35	770	2-M63X1.5	1170
280M	4,6,8	457	368	419	190	280	24	500	450	550	8-ø18.5	5	75m6	M20X42	140	110	20	67.5	79.5	90	542	550	220	620	35	770	2-M63X1.5	1170
315S	2	508	NA	406	216	315	28	600	550	660	8-ø24	6	65m6	M20X42	140	110	18	58	69	120	628	625	285	655	40	950	2-M75X1.5	1285
315S	4,6,8	508	NA	406	216	315	28	600	550	660	8-ø24	6	80m6	M20X42	170	140	22	71	85	120	628	625	285	655	40	950	2-M75X1.5	1315
315M	2	508	457	457	216	315	28	600	550	660	8-ø24	6	65m6	M20X42	140	110	18	58	69	120	628	625	285	775	40	950	2-M75X1.5	1405
315M	4,6,8	508	457	457	216	315	28	600	550	660	8-ø24	6	80m6	M20X42	170	140	22	71	85	120	628	625	285	775	40	950	2-M75X1.5	1435
315L	2	508	457	508	216	315	28	600	550	660	8-ø24	6	65m6	M20X42	140	110	18	58	69	120	628	625	285	775	40	950	2-M75X1.5	1405
315L	4,6,8	508	457	508	216	315	28	600	550	660	8-ø24	6	80m6	M20X42	170	140	22	71	85	120	628	625	285	775	40	950	2-M75X1.5	1435
355M	2	610	500	560	254	355	28	740	680	800	8-ø24	6	75m6	M24X50	140	110	20	67.5	79.5	125	726	715	285	840	42	1040	2-M75X1.5	1545
355M	4,6,8	610	500	560	254	355	28	740	680	800	8-ø24	6	95m6	M24X50	170	140	25	86	100	125	726	715	285	840	42	1040	2-M75X1.5	1545
355L	2	610	560	630	254	355	28	740	680	800	8-ø24	6	75m6	M24X50	140	110	20	67.5	79.5	125	726	715	285	950	42	1040	2-M75X1.5	1655
355L	4,6,8	610	560	630	254	355	28	740	680	800	8-ø24	6	95m6	M24X50	170	140	25	86	100	125	726	715	285	950	42	1040	2-M75X1.5	1655

All technical details are subject to change without any prior notice.
All dimensions in millimetres (mm).

B5/V1 FLANGE MOUNTING AND OVERALL DIMENSIONS

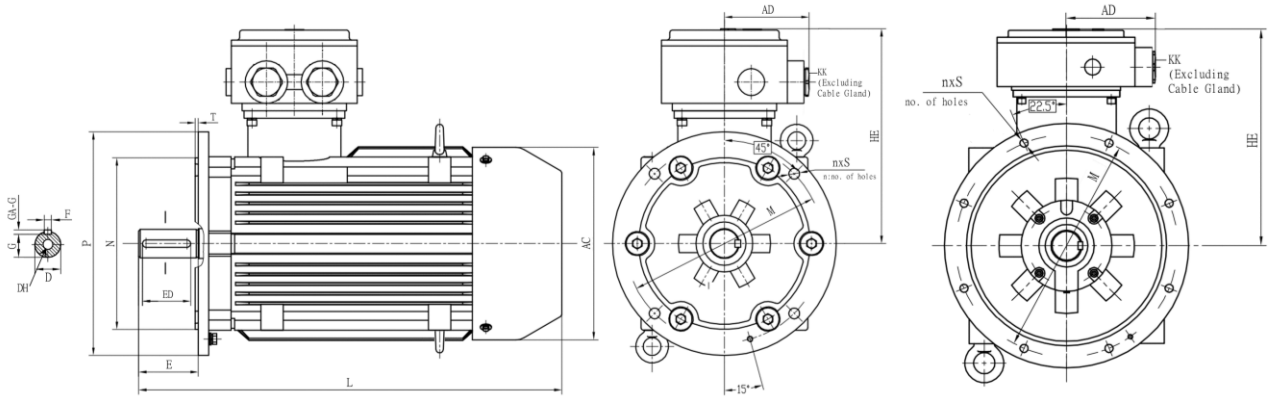

F#80 to F#200 F#225 to F#355

Frame Size	Pole	Mounting Dimensions					Shaft Dimensions							Overall Dimensions				
		M	N	P	S	T	D	DH	E	ED	F	G	GA	AC	AD	HE	KK	L
80	2,4,6,8	165	130	200	4-ø12	3.5	19j6	M6X16	40	28	6	15.5	21.5	160	130	235	2-M25X1.5	330
90S	2,4,6,8	165	130	200	4-ø12	3.5	24j6	M8X19	50	40	8	20	27	175	130	245	2-M25X1.5	365
90L	2,4,6,8	165	130	200	4-ø12	3.5	24j6	M8X19	50	40	8	20	27	175	130	245	2-M25X1.5	390
100L	2,4,6,8	215	180	250	4-ø14.5	4	28j6	M10X22	60	50	8	24	31	205	130	260	2-M25X1.5	435
112M	2,4,6,8	215	180	250	4-ø14.5	4	28j6	M10X22	60	50	8	24	31	225	130	263	2-M32X1.5	515
132S	2,4,6,8	265	230	300	4-ø14.5	4	38k6	M12X28	80	70	10	33	41	265	130	293	2-M32X1.5	535
132M	2,4,6,8	265	230	300	4-ø14.5	4	38k6	M12X28	80	70	10	33	41	265	130	293	2-M32X1.5	575
160M	2,4,6,8	300	250	350	4-ø18.5	5	42k6	M16X36	110	90	12	37	45	320	150	350	2-M40X1.5	730
160L	2,4,6,8	300	250	350	4-ø18.5	5	42k6	M16X36	110	90	12	37	45	320	150	350	2-M40X1.5	760
180M	2,4,6,8	300	250	350	4-ø18.5	5	48k6	M16X36	110	90	14	42.5	51.5	360	150	370	2-M40X1.5	815
180L	2,4,6,8	300	250	350	4-ø18.5	5	48k6	M16X36	110	90	14	42.5	51.5	360	150	370	2-M40X1.5	835
200L	2,4,6,8	350	300	400	4-ø18.5	5	55m6	M20X42	110	100	16	49	59	400	170	400	2-M50X1.5	875
225S	4,6,8	400	350	450	8-ø18.5	5	60m6	M20X42	140	100	18	53	64	450	170	425	2-M50X1.5	930
225M	2	400	350	450	8-ø18.5	5	55m6	M20X42	110	100	16	49	59	450	170	425	2-M50X1.5	930
225M	4,6,8	400	350	450	8-ø18.5	5	60m6	M20X42	140	100	18	53	64	450	170	425	2-M50X1.5	960
250M	2	500	450	550	8-ø18.5	5	60m6	M20X42	140	125	18	53	64	500	220	460	2-M63X1.5	1005
250M	4,6,8	500	450	550	8-ø18.5	5	65m6	M20X42	140	125	18	58	69	500	220	460	2-M63X1.5	1005
280S	2	500	450	550	8-ø18.5	5	65m6	M20X42	140	125	18	58	69	550	220	490	2-M63X1.5	1115
280S	4,6,8	500	450	550	8-ø18.5	5	75m6	M20X42	140	125	20	67.5	79.5	550	220	490	2-M63X1.5	1115
280M	2	500	450	550	8-ø18.5	5	65m6	M20X42	140	125	18	58	69	550	220	490	2-M63X1.5	1170
280M	4,6,8	500	450	550	8-ø18.5	5	75m6	M20X42	140	125	20	67.5	79.5	550	220	490	2-M63X1.5	1170
315S	2	600	550	660	8-ø24	6	65m6	M20X42	140	125	18	58	69	160	130	635	2-M63X1.5	330
315S	4,6,8	600	550	660	8-ø24	6	80m6	M20X42	170	125	22	71	85	175	130	635	2-M63X1.5	365
315M	2	600	550	660	8-ø24	6	65m6	M20X42	140	125	18	58	69	175	130	635	2-M63X1.5	390
315M	4,6,8	600	550	660	8-ø24	6	80m6	M20X42	170	125	22	71	85	205	130	635	2-M63X1.5	435
315L	2	600	550	660	8-ø24	6	65m6	M20X42	140	125	18	58	69	225	130	635	2-M63X1.5	515
315L	4,6,8	600	550	660	8-ø24	6	80m6	M20X42	170	125	22	71	85	265	130	635	2-M63X1.5	535
355M	2	740	680	800	8-ø24	6	75m6	M24X50	140	125	20	67.5	79.5	265	130	685	2-M63X1.5	575
355M	4,6,8	740	680	800	8-ø24	6	95m6	M24X50	170	125	25	86	100	320	150	685	2-M63X1.5	730
355L	2	740	680	800	8-ø24	6	75m6	M24X50	140	125	20	67.5	79.5	320	150	685	2-M63X1.5	760
355L	4,6,8	740	680	800	8-ø24	6	95m6	M24X50	170	125	25	86	100	360	150	685	2-M63X1.5	815

All technical details are subject to change without any prior notice.
All dimensions in millimetres (mm).

B14A SMALL FLANGE MOUNTING AND OVERALL DIMENSIONS

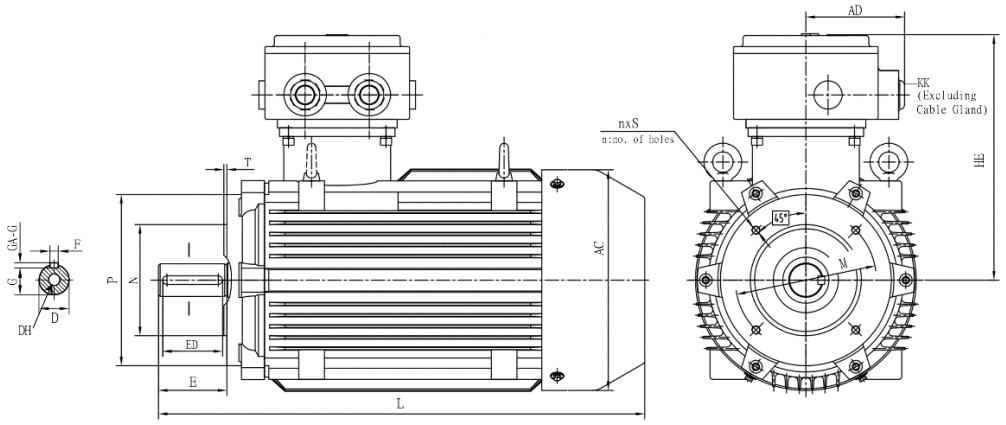

Frame Size	Pole	Mounting Dimensions					Shaft Dimensions							Overall Dimensions				
		M	N	P	S	T	D	DH	E	ED	F	G	GA	AC	AD	HE	KK	L
80	2,4,6,8	100	80	120	4-øM6	3.5	19j6	M6X16	40	28	6	15.5	21.5	160	130	230	2-M32X1.5	330
90S	2,4,6,8	115	95	140	4-øM8	3.5	24j6	M8X19	50	40	8	20	27	175	130	245	2-M32X1.5	365
90L	2,4,6,8	115	95	140	4-øM8	3.5	24j6	M8X19	50	40	8	20	27	175	130	245	2-M32X1.5	390
100L	2,4,6,8	130	110	160	4-øM8	4	28j6	M10X22	60	50	8	24	31	205	130	260	2-M25X1.5	435
112M	2,4,6,8	130	110	160	4-øM8	4	28j6	M10X22	60	50	8	24	31	225	130	263	2-M32X1.5	515
132S	2,4,6,8	165	130	200	4-øM10	4	38k6	M12X28	80	70	10	33	41	265	130	293	2-M32X1.5	535
132M	2,4,6,8	165	130	200	4-øM10	4	38k6	M12X28	80	70	10	33	41	265	130	293	2-M32X1.5	575

B34A SMALL FLANGE & FOOT MOUNTING AND OVERALL DIMENSIONS

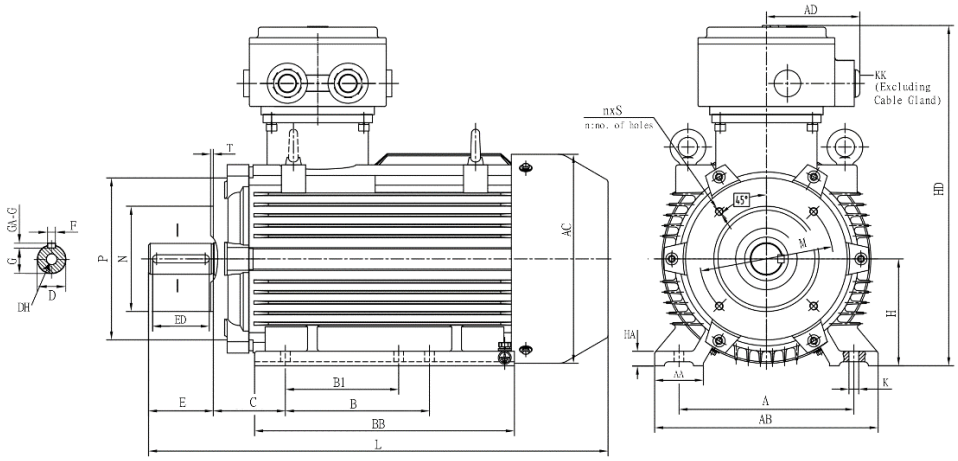

Frame Size	Pole	Mounting Dimensions										Shaft Dimensions							Overall Dimensions								
		A	B	C	H	K	M	N	P	S	T	D	DH	E	ED	F	G	GA	AA	AB	AC	AD	BB	HA	HD	KK	L
80	2,4,6,8	125	100	50	80	10	100	80	120	4-øM6	3.5	19j6	M6X16	40	28	6	15.5	21.5	34	160	160	130	160	10	310	2-M32X1.5	330
90S	2,4,6,8	140	100	56	90	10	115	95	140	4-øM8	3.5	24j6	M8X19	50	40	8	20	27	36	176	175	130	170	12	335	2-M32X1.5	365
90L	2,4,6,8	140	125	56	90	10	115	95	140	4-øM8	3.5	24j6	M8X19	50	40	8	20	27	36	176	175	130	195	12	335	2-M32X1.5	390
100L	2,4,6,8	160	140	63	100	12	130	110	160	4-øM8	4	28j6	M10X22	60	45	8	24	31	40	200	205	130	229	16	360	2-M32X1.5	435
112M	2,4,6,8	190	140	70	112	12	130	110	160	4-øM8	4	28j6	M10X22	60	45	8	24	31	50	240	225	130	290	15	375	2-M32X1.5	515
132S	2,4,6,8	216	140	89	132	12	165	130	200	4-øM10	4	38k6	M12X28	80	63	10	33	41	60	276	265	130	281	18	425	2-M32X1.5	535
132M	2,4,6,8	216	178	89	132	12	165	130	200	4-øM10	4	38k6	M12X28	80	63	10	33	41	60	276	265	130	321	18	425	2-M32X1.5	575

All technical details are subject to change without any prior notice.
All dimensions in millimetres (mm).

TERMINAL BOX & CABLE GLAND SPECIFICATIONS

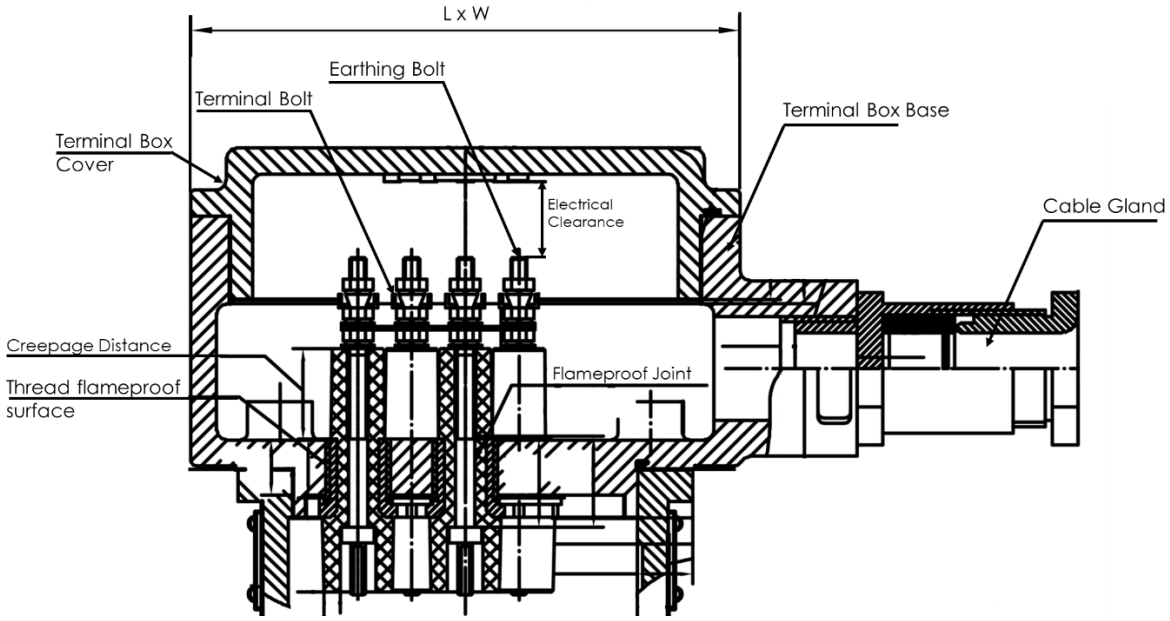

Frame Size	Terminal Box Dimensions (L x W)	Terminal Bolt Specification	No. of Cable Glands	Cable Gland Size	Space Heater Cable Gland Size
80-132	169 x 169	M5	2	2x M32X1.5	1x M16X1.5
160-180	202 x 202	M6	2	2x M40X1.5	1x M16X1.5
200-225	235 x 235	M8	2	2x M50X1.5	1x M16X1.5
250-280	310 x 310	M10	2	2x M63X1.5	1x M16X1.5
315-355	380 x 380	M16	2	2x M75X1.5	1x M16X1.5

CERTIFICATIONS

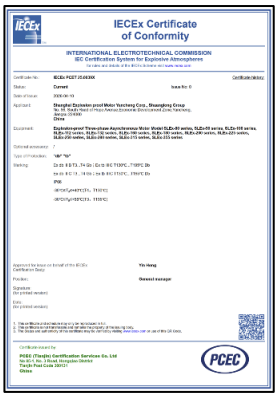

IECEx Certificate

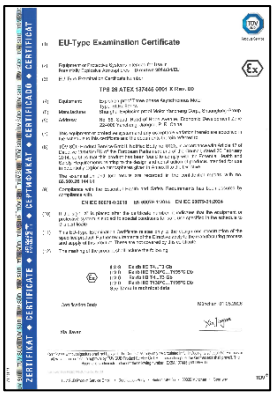

ATEX Certificate

SINGAPORE

ATT Electric & Machinery Pte Ltd
6 Fifth Lok Yang Road,
Singapore 629757

Tel: (+65) 6261 3579
Fax: (+65) 6261 1263
Email: att@attelec.com
Website: www.attelec.com

MALAYSIA

ATT Electric & Machinery Sdn Bhd
No. 5, Jalan USJ 19/4
47620 Subang Jaya,
Selangor Darul Ehsan, Malaysia

Tel: (+603) 8021 6235/36/37
Fax: (+603) 8021 6239
Email: marketing@attelec.com.my
Website: www.attelec.com.my

CHINA

Fuzhou KTZ Electric & Machinery Co. Ltd
No. 66 Huancheng North Road,
Qingliang Town, Yongtai County,
Fuzhou, Fujian, China
Postal Code: 350700

Tel: (+86) 591-24805687
Fax: (+86) 591-24878396
Email: sales@ktzchn.com
Website: www.ktzchn.com

VIETNAM

KTZ Electric & Machinery (VN) Co. Ltd
Lot A19.1, Road D4,
Thành Thành Công Industrial Park,
An Hòa Ward, Trảng Bàng Town,
Tây Ninh Province, Vietnam

Tel: (+84) 276 389 9611
Fax: (+84) 276 389 9612
Email: info.vn@ktzasia.com
Website: www.attelec.com.vn

INDONESIA

PT KTZ Dinamik
Komplek Pergudangan Multiguna Blok T8
Alam Sutera No 38,
Pakulonan, Serpong Utara, Tangerang Selatan,
Banten, Indonesia 15325

Tel: (+62) 21 5032 2347
Fax: (+62) 21 5313 3043
Email: info@ktzdinamik.com
Website: www.attelectricmotor.co.id

Authorized Dealer:

Catalogue No.: ATT/SLEx/2026/BY02

Copyright © 2026 ATT Electric & Machinery Pte Ltd. All Rights Reserved.

All designs, information and images displayed in this catalogue are property of ATT Electric & Machinery Pte Ltd, and may not be reproduced in any manner or form without the expressed written permission of ATT Electric & Machinery Pte Ltd.